SPLIT-TYPE AIR CONDITIONER

		INDOOR UNIT	OUTDOOR UNIT
Normal Efficiency	Basic Model	AQV09UGAN	AQV09UGAX
		AQV12UGAN	AQV12UGAX
	Model Code	AQV09PWAN	AQV09PWAX
		AQV12PWAN	AQV12PWAX
		AQV09PSAN	AQV09PSAX
		AQV12PSAN	AQV12PSAX
High Efficiency	Basic Model	AQV09EWAN	AQV09EWAX
		AQV12EWAN	AQV12EWAX
	Model Code	AQV09PSBN	AQV09PSBX
		AQV12PSBN	AQV12PSBX
		AQV09PSBNSER	AQV09PSBXSER
		AQV12PSBNSER	AQV12PSBXSER

SERVICE Manual

AIR CONDITIONER

THE FEA TURE OF PRODUC T

- **High Energy Efficiency BLDC** Air Conditioner
- good'sleep Mode
  good'sleep Mode can help you sleep quickly and soundly and wake up refreshed.
- Silence Mod
  When you use the "Silence Mode", you can experience extremely quiet operation of your air conditioner.

Refer to the service manual in the GSPN(see the rear cover) for the more information.

Contents

Contents

2. Product Specifications

2-1 The Feature of Product

■ **good' sleep Mode**

good'sleep mode can help you sleep quickly and soundly and wake up refreshed.

■ **Catechin Filter**

■ **Silver Nano Evaporator**

■ **Deodorizing Filter**

them with clean,refreshing air.

2-2 Product Specifications

Model				AQV09P*A(N/X)		AQV12P*A(N/X)	
				Indoor Unit	Outdoor Unit	Indoor Unit	Outdoor Unit
Type				Wall-Mounted		Wall-Mounted	
Performance	Capacity	Cooling	kW	0.75 / 2.5 / 3.2		0.75 / 3.30 / 3.80	
		Heating	(Low / Std / Max)	0.95 / 3.3 / 4.1		0.95 / 4.00 / 4.80	
	Running Frequency	Cooling	Hz	18 / 46 / 68		18 / 66 / 79	
		Heating	(Low / Std / Max)	25 / 65 / 100		25 / 77 / 100	
	Dehumidifying		ℓ/h	0.4		0.8	
	Air Volume	Cooling	m^3/min	16 / 14 / 12		20 / 16 / 13	
		Heating	(H/M/L)	18 / 16 / 14		21 / 17 / 14	
	Noise	Cooling	dB	41	53	43	53
		Heating		41	53	43	53
	Energy Efficiency	Cooling	W/W	3.40		3.21	
		Heating	(Std)	3.63		3.61	
	Power		ph-V-Hz	1 - 220/240 - 50			
Power	Power Consumtion	Cooling	W	290 / 740 / 1110		290 / 1030 / 1210	
		Heating	(Low / Std / Max)	320 / 910 / 1300		320 / 1110 / 1460	
	Operating Current	Cooling	A	1.7 / 3.8 / 5.0		1.7 / 4.8 / 5.6	
		Heating	(Low / Std / Max)	1.8 / 4.4 / 6.0		1.8 / 5.2 / 6.8	
	Power Factor	Cooling	%	70 / 90 / 90		70 / 90 / 90	
		Heating	(Low / Std / Max)	70 / 90 / 90		70 / 90 / 90	
Size	Dimension (Net)	W x H x D	mm	820 x 285 x 205	720 x 548 x 265	820 x 285 x 205	720 x 548 x 265
	Weight (Net)		kg	8.8	26.6	8.8	26.6
	Refrigerant Pipe	Liquid	Dia.(mm) x L(m)	Φ 6.35 x 5			
		Gas		Φ 9.52 x 5			
	Drain Hose		Dia x L(mm)	Φ 20 x 550			
	Compressor	Type		UG9A090FUBEP-SS			
		Motor	Type	Hermetic			
			Rated Output	875W			
	Oil Type			FREOL α 68ES-T			
	Blower	Type		Cross Flow Fan	Propeller	Cross Flow Fan	Propeller
		Motor	Type	Resin / Steel, AC			
			Rated Output	17W	32W	17W	32W
Heat Exchanger (Dia.,Row x Step x Length,mm)				Φ7.0, 2 x 10 x L605 (Main) Φ7.0, 2 x 4 x L575 (Sub)	Φ7.0, 1 x 24 x L757	Φ7.0, 2 x 10 x L605 (Main) Φ7.0, 2 x 4 x L575 (Sub)	Φ9.52, 1 x 20 x L757.6
Refrigerant Control Unit				EEV			
Freezer Oil Capacity			cc	320			
Refrigerant to Change (R410A)			g	800		900	
Protection Device (OLP)				N.A			
Cooling Test Condition				Indoor Unit : DB27° C WB 19° C, Outdoor Unit : DB35° C WB 24° C			
Heating Test Condition				Indoor Unit : DB20° C WB 15° C, Outdoor Unit : DB7° C WB 6° C			
Operation conditon range		Cooling	Indoor	16° C ~ 32° C			
			Outdoor	16° C ~ 46° C			
		Heating	Indoor	27℃ or less			
			Outdoor	-10° C ~ 24° C			

Model				AQV09PSB*(N/X)		AQV12PSB*(N/X)	
				Indoor Unit	Outdoor Unit	Indoor Unit	Outdoor Unit
Type				Wall-Mounted		Wall-Mounted	
Performance	Capacity	Cooling	kW	0.97 / 2.50 / 3.30		0.97 / 3.50 / 4.00	
		Heating	(Low / Std / Max)	0.97 / 3.30 / 4.70		0.97 / 4.00 / 5.40	
	Running Frequency	Cooling	Hz	20 / 46 / 63		20 / 71 / 82	
		Heating	(Low / Std / Max)	20 / 63 / 85		20 / 77 / 100	
	Dehumidifying		ℓ/h	0.88		1.35	
	Air Volume	Cooling	m^3/min	17 / 15 / 13		19 / 16 / 13	
		Heating	(H/M/L)	19 / 17 / 15		21 / 18 / 15	
	Noise	Cooling	dB	41	51	43	53
		Heating		41	51	43	53
	Energy Efficiency	Cooling	W/W	4.02		3.30	
		Heating	(Std)	4.10		3.70	
	Power		ph-V-Hz	1 - 220/240 - 50			
Power	Power Consumtion	Cooling	W	220 / 620 / 930		220 / 1060 / 1250	
		Heating	(Low / Std / Max)	200 / 800 / 1300		200 / 1080 / 1500	
	Operating Current	Cooling	A	1.4 / 3.0 / 4.5		1.4 / 4.8 / 5.8	
		Heating	(Low / Std / Max)	1.2 / 3.8 / 6.0		1.2 / 4.9 / 7.0	
	Power Factor	Cooling	%	75 / 90 / 95		75 / 90 / 95	
		Heating	(Low / Std / Max)	75 / 90 / 95		75 / 90 / 95	
Size	Dimension (Net)	W x H x D	mm	820 x 285 x 205	790 x 545 x 285	820 x 285 x 205	790 x 545 x 285
	Weight (Net)		kg	8.2	30.5	8.2	30.5
	Refrigerant Pipe	Liquid	Dia.(mm) x L(m)	Φ 6.35 x 5			
		Gas		Φ 9.52 x 5			
	Drain Hose		Dia x L(mm)	Φ 20 x 550			
	Compressor	Type		UG9A090FUBEP-SS			
		Motor	Type	Hermetic			
			Rated Output	875W			
	Oil Type			FREOLα68ES-T			
	Blower	Type		Cross Flow Fan	Propeller	Cross Flow Fan	Propeller
		Motor	Type	Resin / Steel, AC	Resin / Steel, DC	Resin / Steel, AC	Resin / Steel, DC
			Rated Output	17W	35W	17W	35W
Heat Exchanger (Dia.,Row x Step x Length,mm)				Φ7.0, 2 x 10 xL605 (Main) Φ7.0, 2 x 4 x L575 (Sub)	Φ7.94, 1 x 24 x L862	Φ7.0, 2 x 10 xL605 (Main) Φ7.0, 2 x 4 x L575 (Sub)	Φ7.94, 1 x 24 x L862
Refrigerant Control Unit				EEV			
Freezer Oil Capacity			cc	320			
Refrigerant to Change (R410A)			g	900		900	
Protection Device (OLP)				N.A			
Cooling Test Condition				Indoor Unit : DB27° C WB 19° C, Outdoor Unit : DB35° C WB 24° C			
Heating Test Condition				Indoor Unit : DB20° C WB 15° C, Outdoor Unit : DB7° C WB 6° C			
Operation conditon range		Cooling	Indoor	16° C ~ 32° C			
			Outdoor	-10° C ~ 46° C			
		Heating	Indoor	27℃ or less			
			Outdoor	-15° C ~ 24° C			

Model		Normal Efficiency Model		High Efficiency Model	
		AQV09P*AN(X)	AQV12P*AN(X)	AQV09PSBN(X)*	AQV12PSBN(X)*
Design	Indoor Unit				
	Outdoor Unit			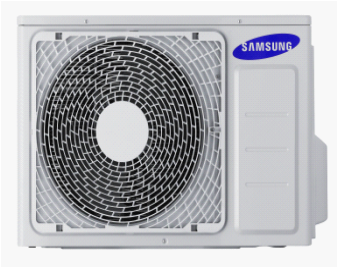	
Net Weight	Indoor Unit	8.8 kg		9.0 kg	
	Outdoor Unit	28.0 kg	31.0 kg	33.8 kg	
Dimension (W x H x D)	Indoor Unit	820 x 285 x 205 (mm)		820 x 285 x 205 (mm)	
	Outdoor Unit	720 x 548 x 265 (mm)		790 x 545 x 285 (mm)	
Noise Level	Indoor Unit	41 dB↓	43 dB↓	41 dB↓	43 dB↓
	Outdoor Unit	53 dB↓	53 dB↓	51 dB↓	53 dB↓
Air Purifying System	Filter	Evaporator Catechin Filter			
Indoor Display		Color LED Display (3 Mode)			

2-4 Accessory and Option Specifications

2-4-1 Accessories

Item	Descriptions	Code-No.	Q'TY	Remark
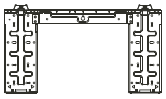	Assy Plate Hanger	DB97-02851C	1	Indoor Unit
	Remote Control	DB93-11115K	1	
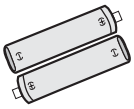	Batteries for Remote Control	DB47-90024A	2	
	Manual	DB98-32436A	1	

Item	Descriptions	Code-No.	Q'TY	Remark
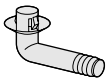	Drain Plug	DB67-20011A	1	Outdoor Unit
	Rubber Leg	DB73-20134A	4	

5. Exploded Views and Parts List

5-1 Indoor Unit

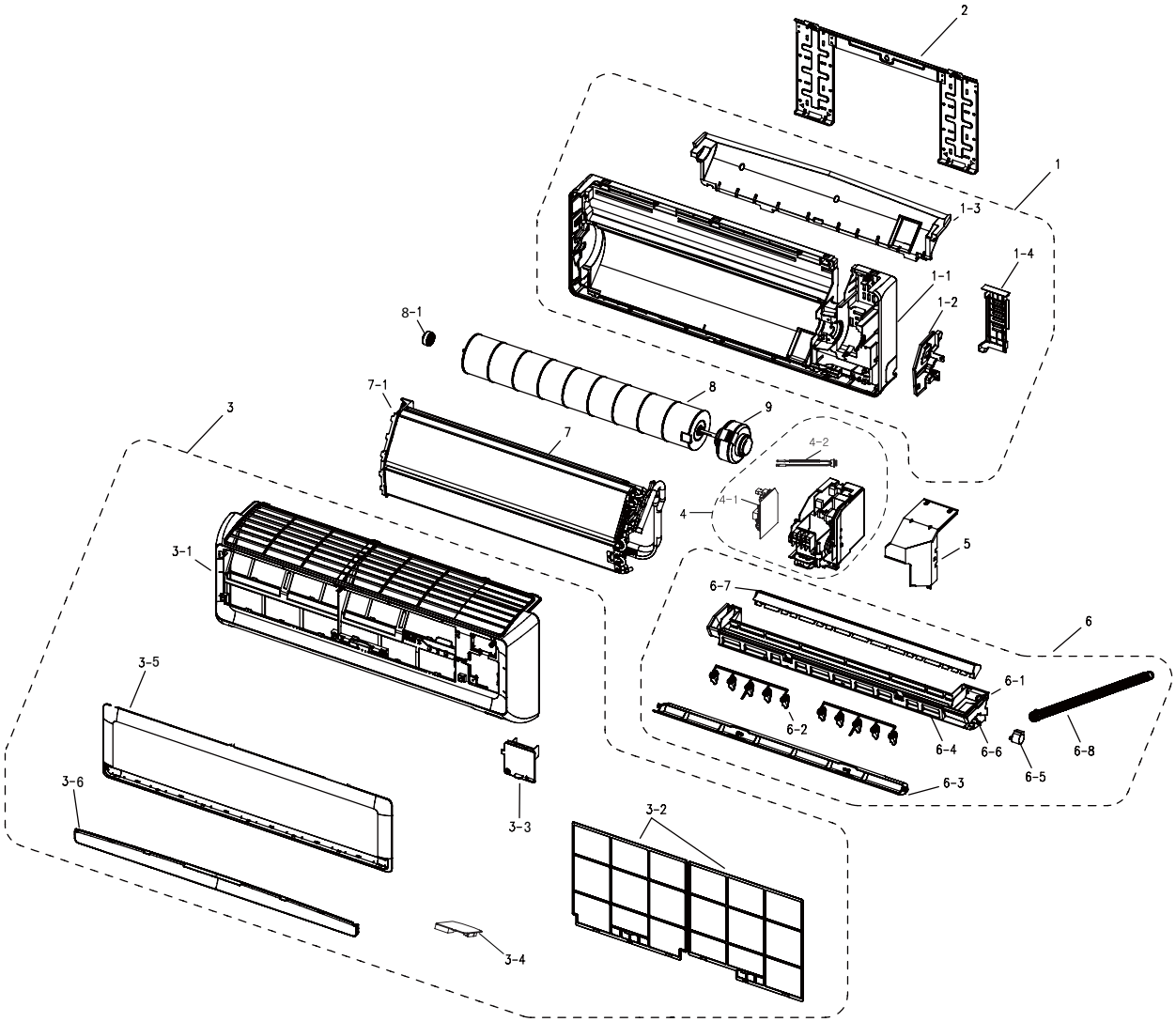

■ Parts List

No.	Code No.	Description	Specification	Qty				SA/SNA
				AQV**PWA	AQV**PSA	AQV**PSB	AQV**PSBSER	
1	DB94-01923B	ASSY BACK BODY	ASSY	1	1	1	1	SA
1-1	DB61-03656A	BODY BACK	HIPS	1	1	1	1	SA
1-2	DB61-03651B	SUPPORT-EVAP RH	HIPS	1	1	1	1	SA
1-3	DB62-05888A	SEAL-INSUL BODY REAR	EPS(30)	1	1	1	1	SA
1-4	DB61-03666A	HOLDER-PIPE	HIPS	1	1	1	1	SA
2	DB97-02851C	ASSY-PLATE HANGER	SGCC-M, T0.7	1	1	1	1	SA
3	DB92-02280A	ASSY PANEL FRONT	ASSY	1	1	1	1	SA
3-1	DB64-02561A	PANEL FRONT	HIPS	1	1	1	1	SA
3-2	DB63-02760A	FILTER-PRE	PP	2	2	2	2	SA
3-3	DB97-11240C	ASSY COVER TERMINAL	ASSY	1	1	1	1	SA
3-4	DB90-06134B	ASSY COVER DISPLAY	ASSY	1	1	1	1	SA
3-5	DB64-02553C	GRILLE-AIR INLET	HIPS	1	1	1	1	SA
3-6	DB64-02550A	DECO-GRILLE	HIPS	1	-	-	-	SA
3-6	DB64-02550B	DECO-GRILLE	HIPS	-	1	1	1	SA
4	DB93-10953A	ASSY CONTROL IN	ASSY	1	1	1	1	SNA
4-1	DB93-10859G	ASSY PCB MAIN IN	PCB	1	1	-	-	SA
4-1	DB93-10955A	ASSY PCB MAIN IN	PCB	-	-	1	1	SA
4-2	DB95-04570B	ASSY THERMISTOR IN	SENSOR	1	1	1	1	SA
5	DB90-04385A	ASSY COVER CONTROL IN	T0.5	1	1	1	1	SA
6	DB94-02960A	ASSY TRAY DRAIN	ASSY	1	1	1	1	SA
6-1	DB63-02118A	TRAY DRAIN	ABS	1	1	1	1	SA
6-2	DB61-03672A	BLADE-V	PP	2	2	2	2	SA
6-3	DB66-01559A	BLADE-H	ABS	1	1	1	1	SA
6-4	DB62-05892A	INSULATION-TRAY FR	FR EPS(30)	1	1	1	1	SA
6-5	DB31-00371A	MOTOR STEP	DC12V,600gf.cm	1	1	1	1	SA
6-6	DB69-00839A	CUSHION-TRAY RH	EPS(30)	1	1	1	1	SA
6-7	DB63-02121A	TRAY-STABILIZER	HIPS	1	1	1	1	SA
6-8	DB94-00458D	ASSY DRAIN-HOSE	ASSY	1	1	1	1	SA
7	DB96-11359B	ASSY EVAP TOTAL	ASSY	1	1	1	1	SA
7-1	DB61-03650A	HOLDER-EVAP	HIPS	1	1	1	1	SA
8	DB94-01874A	ASSY-CROSS FAN ASSY	AS +GF 30%	1	1	1	1	SA
8-1	DB94-00455B	ASSY RUBBER BEARING	ASSY	1	1	1	1	SA
9	DB31-00531D	MOTOR FAN	ASSY	1	1	1	1	SA

5-2 Outdoor Unit

AQV**P*AX

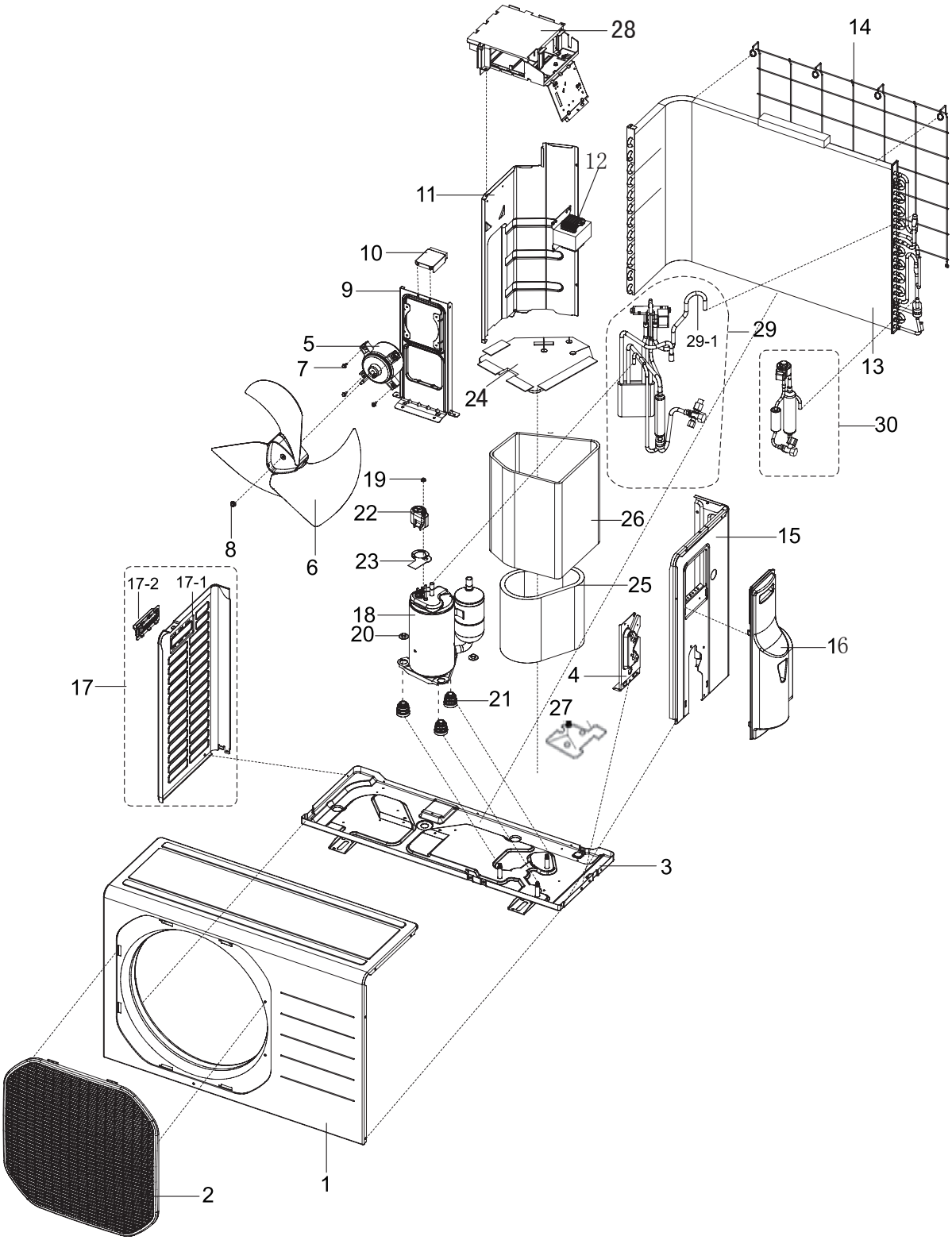

■ **Parts List**

No.	Code No.	Description	Specification	Qty		SA/SNA
				AQV09P*AX	AQV12P*AX	
1	DB90-03846A	ASSY CABI FRONT	ASSY	1	1	SA
2	DB63-02004A	GUARD FAN	PP	1	1	SA
3	DB90-01330L	ASSY BASE OUT	ASSY	1	1	SA
4	DB99-00401B	BRACKET-VALVE	SECC-M, T1.0	1	1	SA
5	DB31-00590A	MOTOR FAN	ASSY	1	1	SA
6	DB67-00397B	FAN-PROPELLER	AS+GF20%, Φ400	1	1	SA
7	6009-001369	SCREW-HEX	M4, L12	3	3	SA
8	DB60-30004A	SCREW-MACHINE	M6,ZPC(WHT)	1	1	SA
9	DB61-01644A	BRACKET MOTOR	SGCC-M	1	1	SA
10	DB97-02225N	ASSY-SUPPORT PLATE B/M	ASSY	1	1	SA
11	DB94-02958A	ASSY-PARTITION	ASSY	1	1	SA
12	DB27-00041B	COIL CHOKE-REACTOR	5mH,10A	1	1	SA
13	DB96-06562H	ASSY COND	ASSY	-	1	SA
13	DB96-13214C	ASSY COND	ASSY	1	-	SA
14	DB64-02117B	SCREEN-COND BAR	ASSY	1	1	SA
15	DB90-01546Q	ASSY CABINET-SIDE RH	ASSY	1	1	SA
16	DB90-03818H	ASSY COVER CONTROL	ASSY	1	1	SA
17	DB90-01332C	ASSY CABINET-SIDE LF	ASSY	1	1	SA
17-1	DB64-01094A	CABINET-SIDE LF	SECC-P	1	1	SA
17-2	DB64-00992A	HANDLE-LF	PP	1	1	SA
18	UG9A090FUBEPSS	COMPRESSOR	ROTARY	1	1	SA
19	6021-001142	NUT-HEXAGON FLANGE	M5,ZPC(YEL)	1	1	SA
20	DB60-30028A	SCREW-HEX	M8,ZPC(WHT)	3	3	SA
21	DB99-01063A	GROMMET ISOLATOR	ASSY	3	3	SA
22	DB63-02312A	COVER TERMINAL	NORYL	1	1	SA
23	DB63-01416C	GASKET	EPDM RUBBER	1	1	SA
24	DB63-02843A	FELT-COMP UPPER OUT	FELT+PVC	1	1	SA
25	DB63-02850A	FELT-COMP SIDE	FELT	1	1	SA
26	DB63-02844A	FELT-COMP SIDE OUT	FELT+PVC	1	1	SA
27	DB63-02845A	FELT-COMP BASE	FELT	1	1	SA
28	DB93-10959A	ASSY CONTROL OUT	ASSY	1	1	SNA
29	DB96-14951A	ASSY-VALVE 4WAY	ASSY	1	1	SA
29-1	DB95-01612C	ASSY-SOLENOID	ASSY	1	1	SA
30	DB96-14950A	ASSY-VALVE CHECK	ASSY	1	1	SA

5-2 Outdoor Unit

AQV**PSBX*

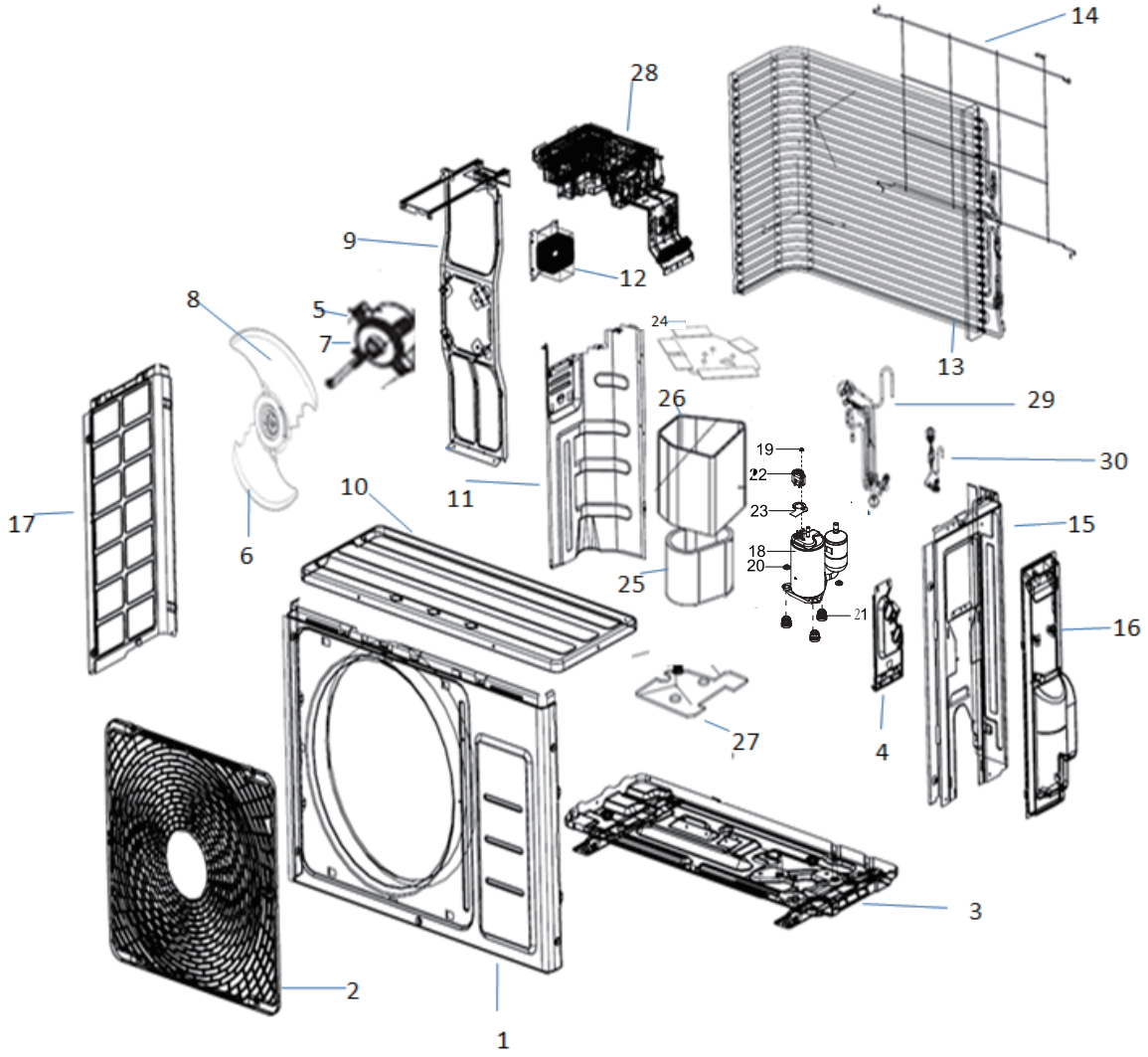

■ Parts List

No.	Code No.	Description	Specification	Qty AQV09/12PSBX*	SA/SNA
1	DB90-05752A	ASSY CABI FRONT	ASSY	1	SA
2	DB63-02588A	GUARD FAN	PP	1	SA
3	DB90-06226A	ASSY BASE OUT	ASSY	1	SA
4	DB90-05738A	BRACKET-VALVE	SGCC-M(PAINTED)	1	SA
5	DB31-00564A	MOTOR FAN	ASSY	1	SA
6	DB67-01042A	FAN-PROPELLER	PP-(GF+PD)40, Φ410	1	SA
7	6009-001369	SCREW-HEX	M4, L12	3	SA
8	DB60-30004A	SCREW-MACHINE	M6,ZPC(WHT)	1	SA
9	DB90-06219B	BRACKET MOTOR	SGCC-M	1	SA
10	DB90-05736A	ASSY CABINET-UPPER	ASSY	1	SA
11	DB94-02998A	ASSY-PARTITION	ASSY	1	SA
12	DB27-00042B	COIL CHOKE-REACTOR	5mH,15A	1	SA
13	DB96-15014A	ASSY COND	ASSY	1	SA
14	DB64-02444A	SCREEN-COND BAR	ASSY	1	SA
15	DB90-05751A	ASSY CABINET-SIDE RH	ASSY	1	SA
16	DB90-05740A	ASSY COVER VALVE	ASSY	1	SA
17	DB90-05749A	ASSY CABINET-SIDE LF	ASSY	1	SA
18	UG9A090FUBJPSS	COMPRESSOR	ROTARY	1	SA
19	6021-001142	NUT-HEXAGON FLANGE	M5,ZPC(YEL)	1	SA
20	DB60-30028A	SCREW-HEX	M8,ZPC(WHT)	3	SA
21	DB99-01063A	GROMMET ISOLATOR	ASSY	3	SA
22	DB63-02310A	COVER TERMINAL	NORYL	1	SA
23	DB63-00817B	GASKET	EPDM RUBBER	1	SA
24	DB63-02863A	FELT-COMP UPPER OUT	FELT+PVC	1	SA
25	DB63-02861A	FELT-COMP SIDE	FELT	1	SA
26	DB63-02860A	FELT-COMP SIDE OUT	FELT+PVC	1	SA
27	DB63-02864A	FELT-COMP BASE	FELT	1	SA
28	DB93-10960A	ASSY CONTROL OUT	ASSY	1	SNA
29	DB96-15215A	ASSY-VALVE 4WAY	ASSY	1	SA
30	DB96-15216A	ASSY-EEV	ASSY	1	SA
30-1	DB62-03916A	VALVE EXPANSION BODY	FUJIKOKI Φ1.4	1	SA
30-2	DB62-03964A	VALVE EXPANSION COIL	FUJIKOKI 6-PIN	1	SA

5-3 ASSY-CONTROL IN

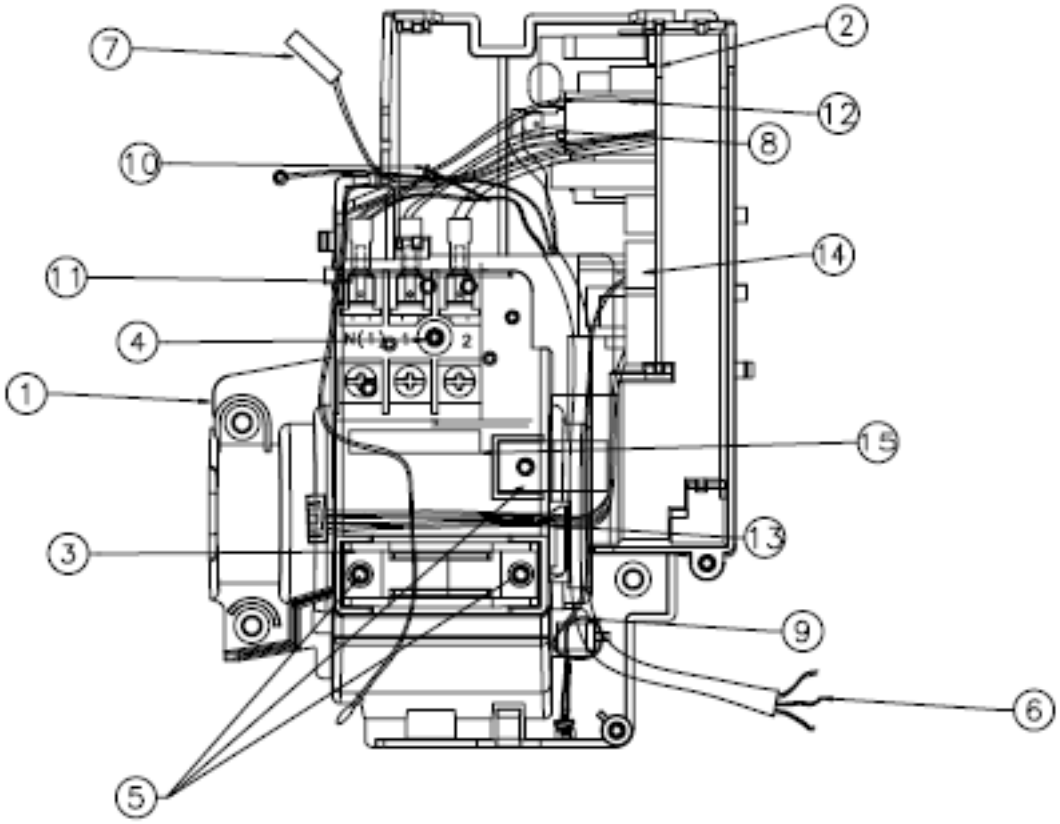

	ASSY CONTROL IN CODE		DB93-10953A		DB93-10953B ⚠	
	适用型号		MALDIVE L/C 9~18K H/P L/C 非原装 AQV12PWAN AQV09PWAN		MALDIVE L/C 9~18K H/P L/C 非原装 ASV12PAXAX ASV09PAXAX	
NO	NAME	SPEC	CODE-NO	QTY	CODE-NO	QTY
1	CASE CONTROL IN	MALDIVE	DB61-04578A	1	DB61-04578A	1
2	ASS'Y PCB MAIN	MALDIVE LW COST	DB93-10859G	1	DB93-10859G	1
3	HOLDER WIRE CLAMP	ABS,BLK,V21-PJ	DB61-01097A	1	DB61-01097A	1
4	SCREW	PH M3*L25	DB91-00309A	1	DB91-00309A	1
5	SCREW	TH M4*L10	DB97-02418A	3	DB97-02418A	3
6	ASS'Y POWER CORD	ASS'Y POWER CORD	DB91-01260A DB91-00434A ⚠	1	DB91-01260A	1
7	ASS'Y THERMISTOR	3m,BLK,SM1000,WIT	DB95-04570B	1	DB95-04570B	1
8	ASSY C/W 1/8(1) TO RY7(3)	6PIN	DB93-08572A	1	DB93-08572A	1
9	ASSY C/W LOUVER	5 PIN	DB93-04688B	1	DB93-04688B	1
10	CABLE TIE	NYLON66	DB65-10088D	1	DB65-10088D	1
11	TERMINAL BLOCK	(N(1),1,2)	DB65-00181B	1	DB65-00181B	1
12	POWER IN WIRE	2 PIN	DB93-10916F DB93-10916E ⚠	1	DB93-10916F	1
13	MAIN PBA TO DISPLAY	9 PIN	DB93-10918C	1	DB93-10918C	1
14	MPI WIRE	100MM	DB93-04695B	0	DB93-04695B	1
15⚠	LABEL	POWER NO COM LABEL	DB98-32314A	1	DB98-32314A	1

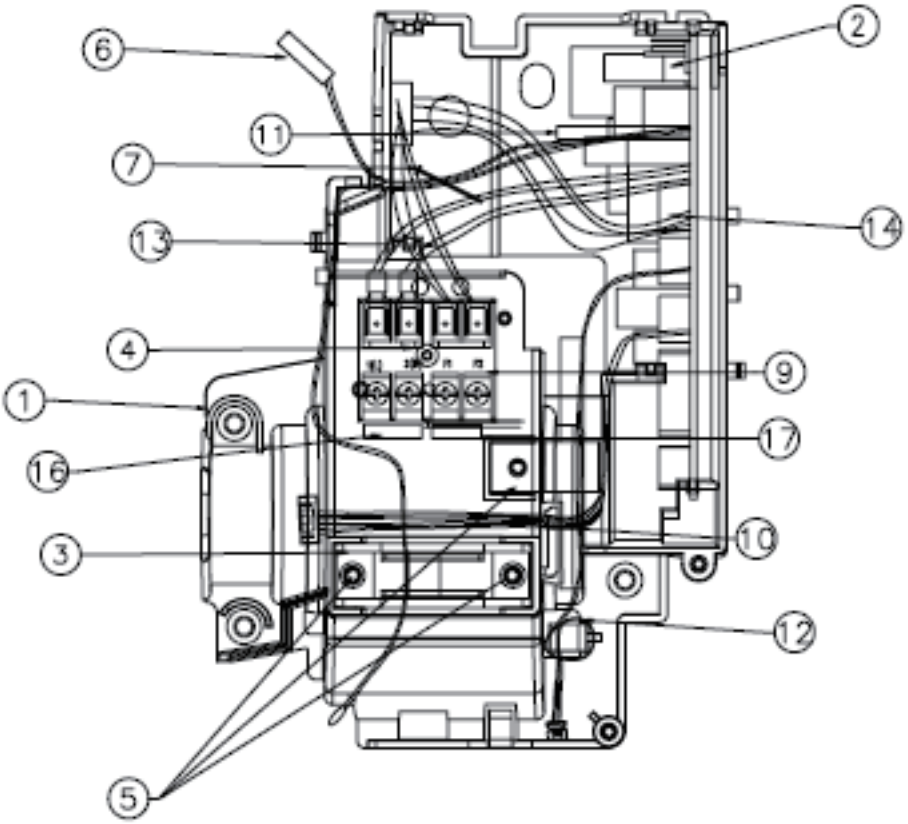

	ASSY CONTROL IN CODE		DB93-10957A	
	适用型号		MALDIVE HIGH 9~12K H/P 恶劣地区基准 AQV12PSBN AQV09PSBN	
NO	NAME	SPEC	CODE-NO	QTY
1	CASE CONTROL IN	MALDIVE	DB61-04578A	1
2	ASS'Y PCB MAIN	MALDIVE1 HIGH EEV	DB93-10955A	1
3	HOLDER WIRE CLAMP	ABS,BLK,V21-PJ	DB61-01097A	1
4	SCREW	PH M3*L25	DB91-00309A	1
5	SCREW	TH M4*L10	DB97-02418A	2
6	ASS'Y THERMISTOR	3*,BLK,SM200,WHT	DB95-04570B	1
7	CABLE TIE	NYLON66	DB65-10088D	1
9	TERMINAL BLOCK	[1(L),2(N),F1,F2]	DB65-00176C	1
10	MAIN PBA TO DISPLAY	10 PIN TO 9 PIN	DB93-10918H	1
11	MAIN PBA TO TERMINAL FUSE	2 PIN	DB93-10917A	0
12	ASSY C/M LOUVER	5 PIN,250mm,WHITE	DB93-04688B	1
13	POWER IN WIRE	2 PIN	DB93-10942A	1
14	COMM WIRE	2 PIN	DB95-04339E	1
15	MPI WIRE	4 PIN,100mm	DB93-04695B	0
16	LABEL	POWER	DB98-33293A	1
17	LABEL	COMMUNICATION	DB98-33292A	1

■AQV**PWA

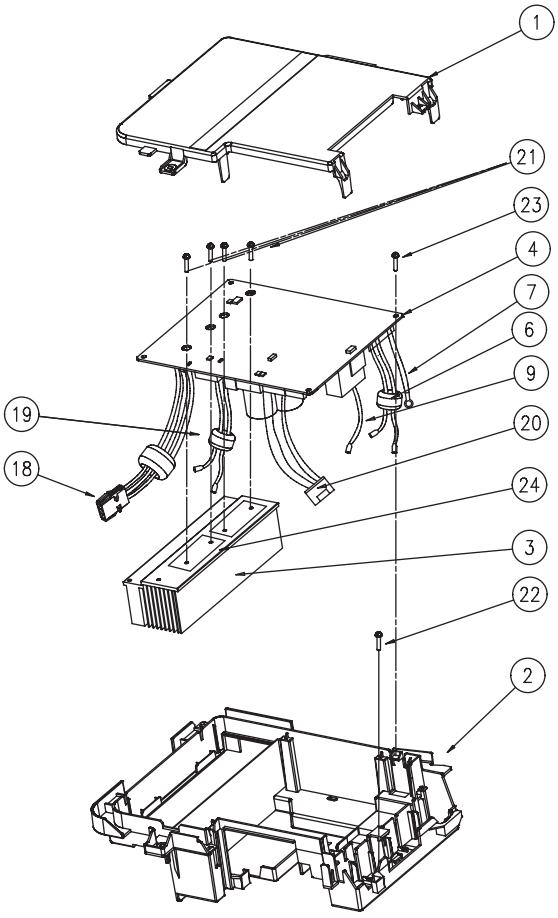

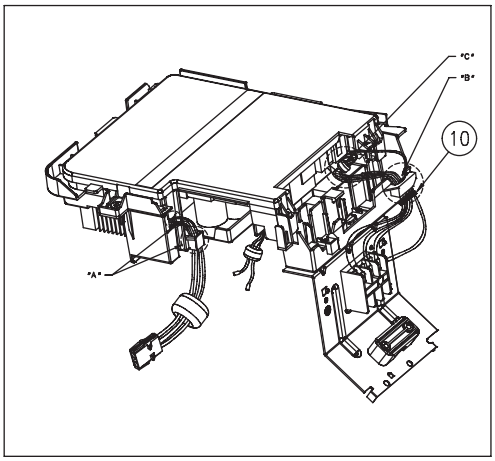

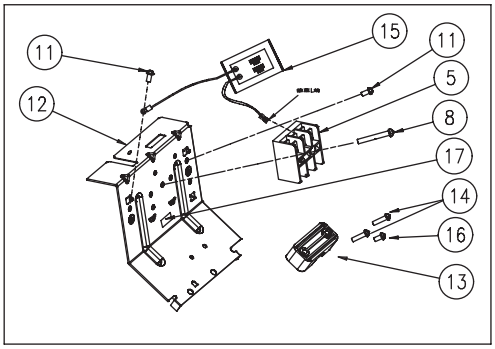

ASSY CONTROL OUT CODE				DB93-10959A
MODEL				AC FAN 150 COMP AQV12P*AX AQV09P*AX
NO	CODE-NO	NAME	SPEC	QTY
1	DB61-04676A	CASE CONTROL-COVER	OI	1
2	DB61-04658A	CASE CONTROL-BASE	SI/OI	1
3	DB62-09724A	HEAT SINK	OI	1
4	DB93-10938A	ASSY PCB MAIN	OI	1
5	DB65-00181B	TERMINAL BLOCK	TERMINAL BLOCK-ASSY	1
6	DB93-09495A	WIRE-POWER	AWG16,BRN,SKYBLU	1
7	DB93-09494A	WIRE-EARTH	AWG20,GRNYEL	1
8	6002-000555	SCREW	M4	1
9	DB93-10820A	WIRE-POWER	AWG20,BLK	1
10	DB65-10088D	CABLE-TIE	NYLON66	1
11	6009-001001	SCREW	TH+	3
12	DB61-04678A	PLATE-CONTROL OUT	OI	1
13	DB61-00250A	HOLDER-WIRE CLAMP	HOLDER-WIRE CLAMP	1
14	6002-000214	SCREW	TH,+,-,1,M4.0,L16,ZPC(BLK)	2
15	DB95-04748A	ASSY NOISE ABSORBER	*	1
16	6001-001054	SCREW	M4,L25	1
17	DB98-32314A	LABEL	POWER/COMM	1
18	DB93-09497A	WIRE-COMP	AWG16,RED,BLU,YEL	1
19	DB93-09493A	WIRE-REACTOR	AWG16,WHT	1
20	DB93-11026A	WIRE-DOWNLOAD	4PIN	1
21	DB91-00306A	ASSY-SCREW MACHINE	M3,L16	4
22	6002-000527	SCREW	M4,L10	1
23	6002-000630	SCREW	PH +	1
24	DB98-24813A	THERAL GREASE		2g

■AQV**PSB

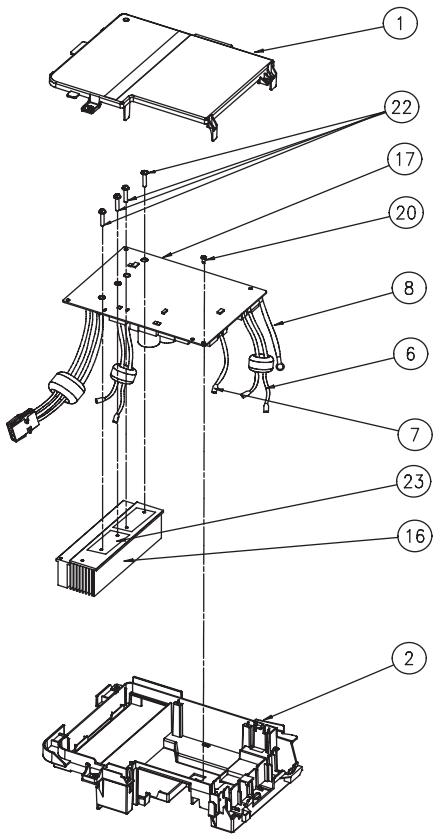

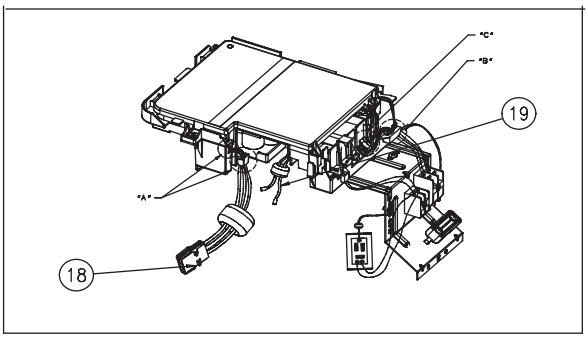

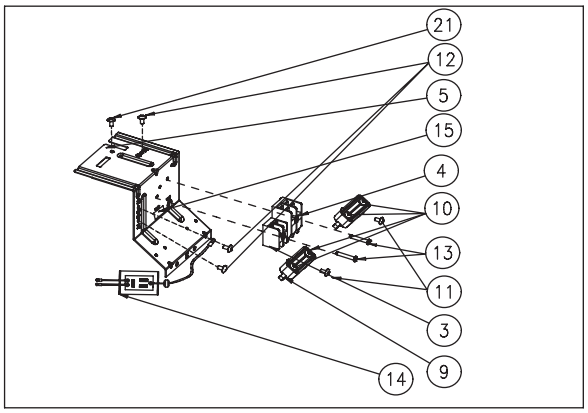

ASSY CONTROL OUT CODE				DB93-10960A	DB93-10960B
适用型号				AC FAN 9/12K 150 COMP 欧洲向 AQV12PSBX☆ AQV09PSBX☆	AC FAN 18K 150 COMP 欧洲向 AQV18PWAX
NO	CODE-NO	NAME	SPEC	QTY	QTY
1	DB61-04659A	CASE CONTROL-COVER	SI	1	1
2	DB61-04658A	CASE CONTROL-BASE	SI/OI	1	1
3	DB65-00061H	TERMINAL BLOCK	TERMINAL BLOCK-ASSY	1	1
4	DB65-00298B	TERMINAL BLOCK	TERMINAL BLOCK-ASSY	1	1
5	DB61-04324A	PLATE-CONTROL OUT	SI	1	1
6	DB93-09495G	WIRE-POWER	AWG16,BRN,SKYBLU	1	1
7	DB93-09496A	WIRE-COMUNICATION	AWG22,RED,BLU	1	1
8	DB93-09494C	WIRE-EARTH	AWG20,GRNYEL	1	1
9	DB61-00250A	HOLDER-WIRE CLAMP	HOLDER-WIRE CLAMP	2	2
10	6002-000214	SCREW	TH,+,-,1,M4.0,L16,ZPC(BLK)	4	4
11	6001-001054	SCREW	M4,L25	2	2
12	6009-001001	SCREW	TH+	3	3
13	6002-000555	SCREW	M4,L25	2	2
14	DB95-01712M	ASSY NOISE ABSORBER	*	1	1
15	DB98-33292A	LABEL	COMM/POWER	1	1
16	DB62-09724A	HEAT SINK	OI	1	0
	DB62-09725A	HEAT SINK	SI	0	1
17	DB93-10952A	ASSY PCB MAIN	SI	1	1
18	DB93-09497C	WIRE-COMP	AWG16,RED,BLU,YEL	1	1
19	DB93-09493C	WIRE-REACTOR	AWG16,WHT	1	1
20	6002-000630	SCREW	PH +	1	1
21	6002-000527	SCREW	M4,L10	1	1
22	DB91-00306A	ASSY-SCREW MACHINE	M3,L16	4	4
23	DB98-001027	THERAL GREASE	NYLON66	2g	2g
24	DB65-10088D	CABLE-TIE		0	0

8. Schematic Diagram

8-1 Indoor Unit

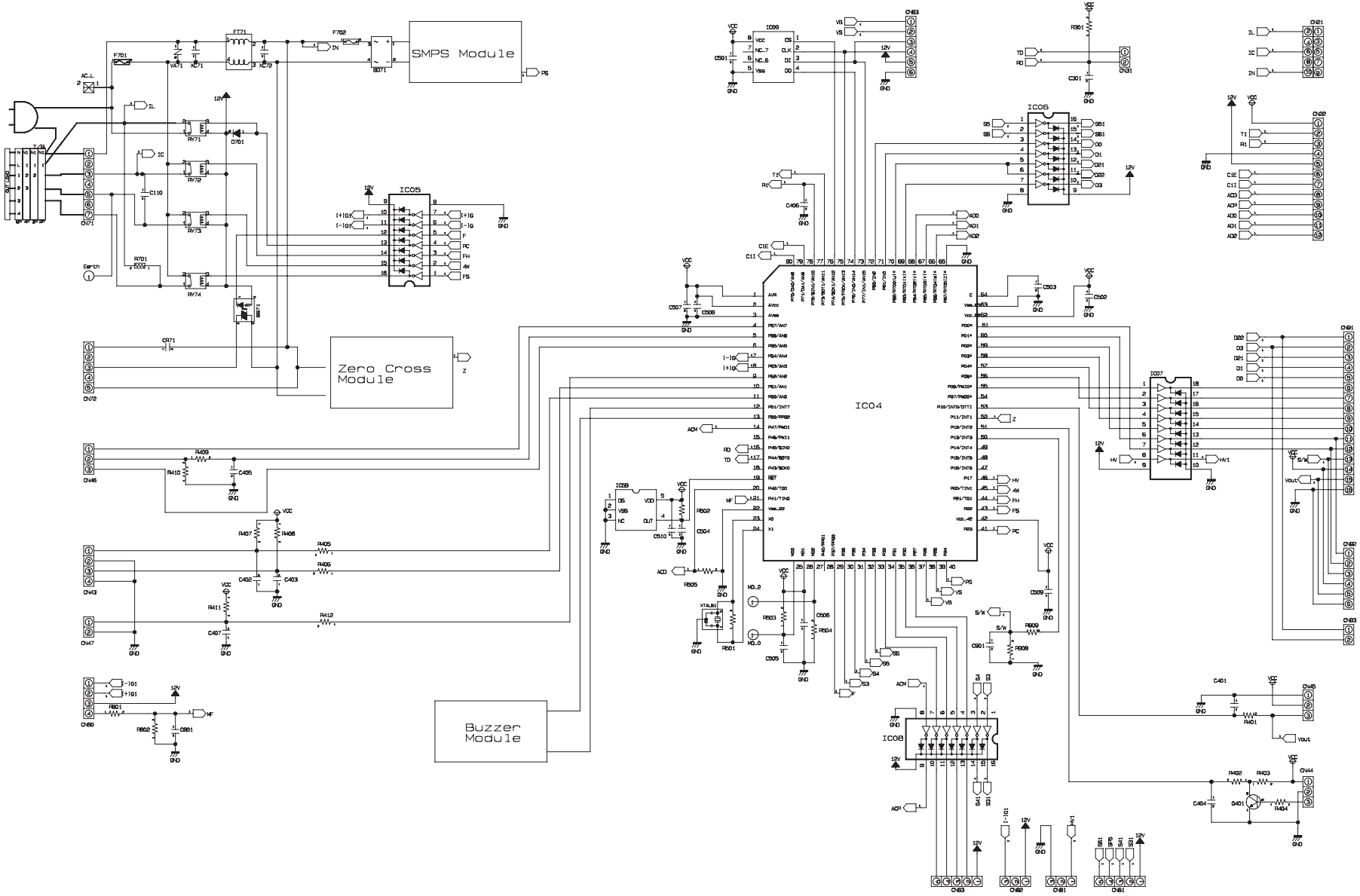

This Document can not be used without Samsung's authorization.

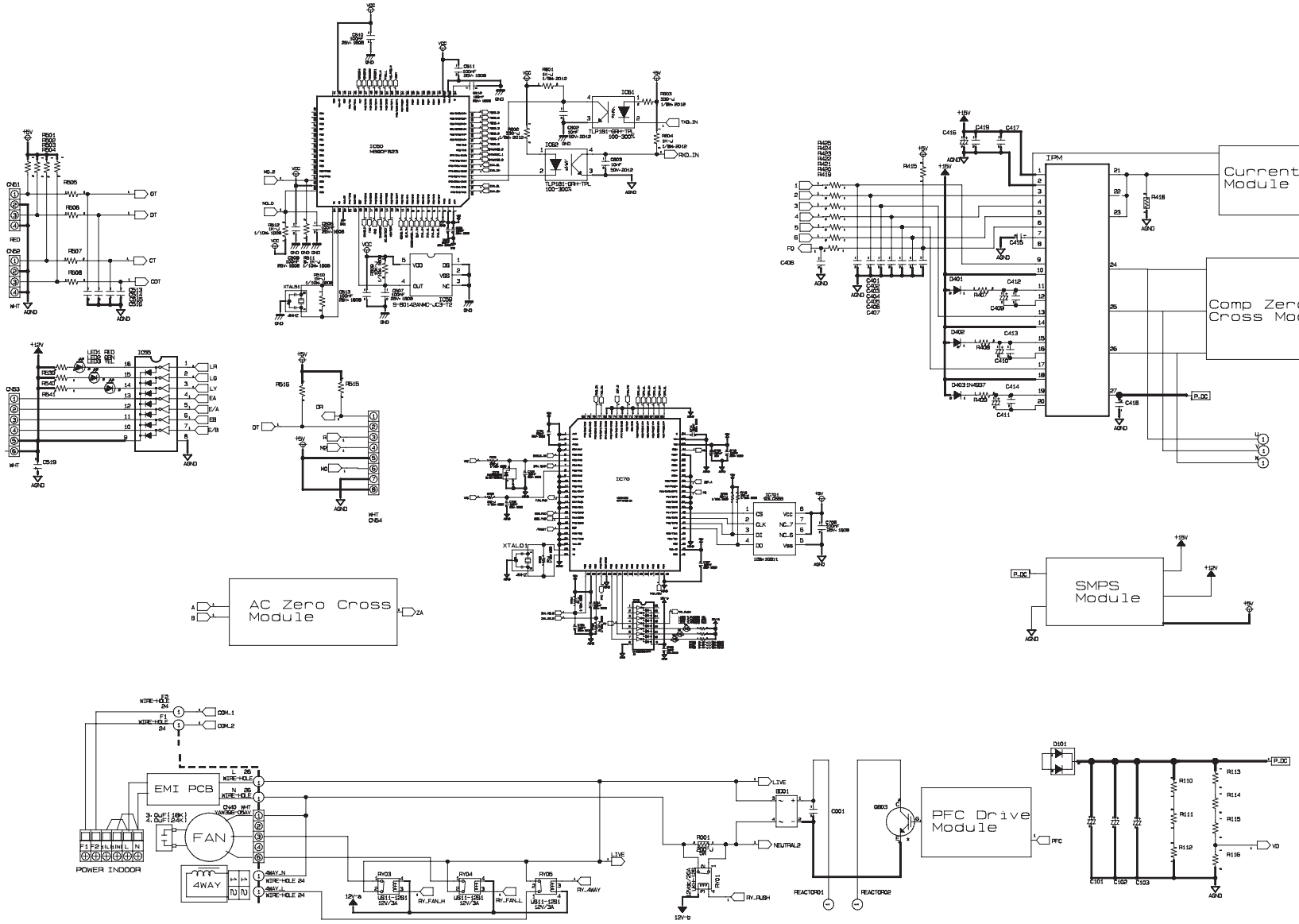

This Document can not be used without Samsung's authorization.

4. Disassembly and Reassembly

■ Necessary Tools

Item	Remark
SCREW DRIVER	
MONKEY SPANNER	

4-1 Indoor Unit

No	Parts	Procedure	Remark
1	PANEL-FRONT	1) Stop the driving of air conditioner and shut off main power supply. 2) Open the FRONT-GRILLE and pull out from the PANEL-FRONT.	
		3) Detach COVER-TERMINAL from the PANEL-FRONT.(use + Screw Driver)	
		4) Loosen connector wire(white) and detach the temperature sensor wire.	
		5) To detach the FRONT-PANEL the main frame, unfasten 2 screw at the bottom.(use + Screw Driver)	
		6) Take off the FRONT-PANEL,lifting up the bottom.	

No	Parts	Procedure	Remark
2	TRAY DRAIN	1) Loosen stepping motor wire and detach the hook of main frame.	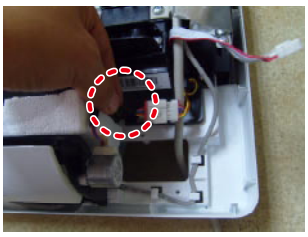
		2) To detach TRAY-DRAIN from the main frame, pull the bottom of the TRAY-DRAIN towards you.	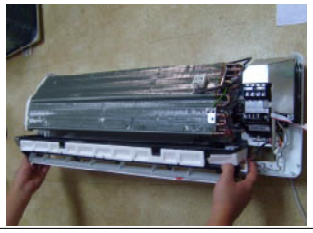
3	CONTROL IN	1) Unfasten the earth screw.(use + Screw Driver)	
		2) Detach COVER-CONTROL from the CASECONTROL.	
		3) Detach the temperature sensor.	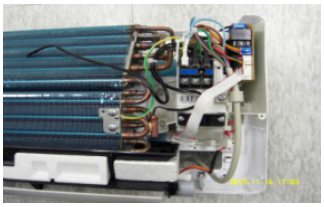
		4) Loosen MOTOR Wire.	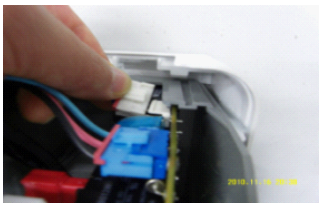
		5) Take off the CASE-CONTROL from the main frame.	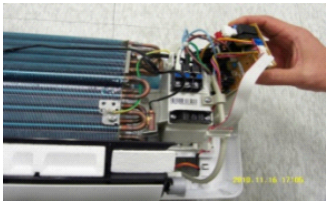

No	Parts	Procedure	Remark
4	PBA	1) Unfasten the screw.	
		2) Cut the cable tie.	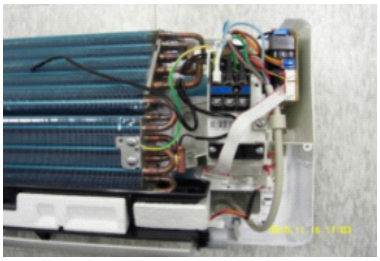
		3) Loosen the terminal block wires. ❊ Caution: The terminal is locking type. So, when you separate terminals, pull pressing the button. 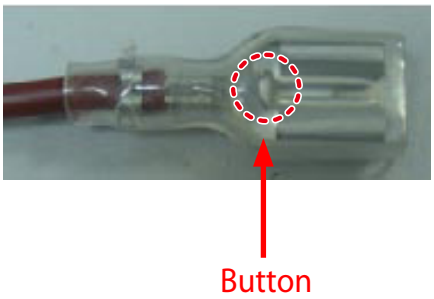 	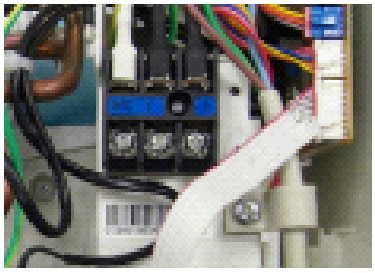

No	Parts	Procedure	Remark
4	PBA	4) Loosen the Motor Feedback connector. ❊ Caution: When you separate the connector, pull pressing the locking button.	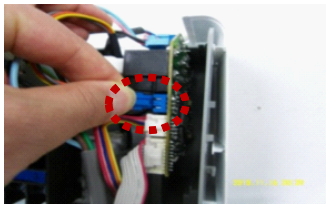
		5) Loosen Stepping MOTOR connector. ❊ Caution: When you separate the connector, pull pressing the locking button.	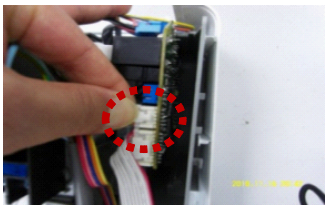
		6) Loosen Main Power connector. ❊ Caution: When you separate the connector, pull pressing the locking button.	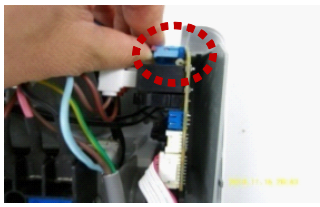
		7) Loosen the Thermistor wire connector. ❊ Caution: When you separate the connector, pull pressing the locking button.	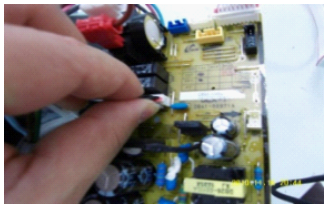
		8) Loosen the Relay connector(Red,White).	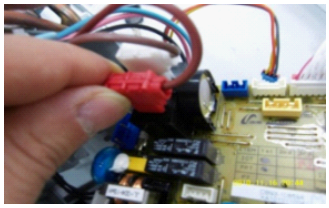

No	Parts	Procedure	Remark
5	EVAPORATOR	1) Unfasten the screw at the right side. (use + Screw Driver)	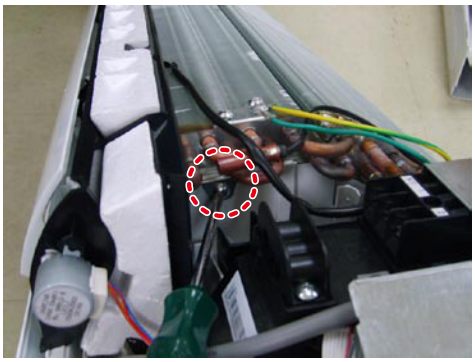
		2) Unfasten the screw at the left side. (use + Screw Driver)	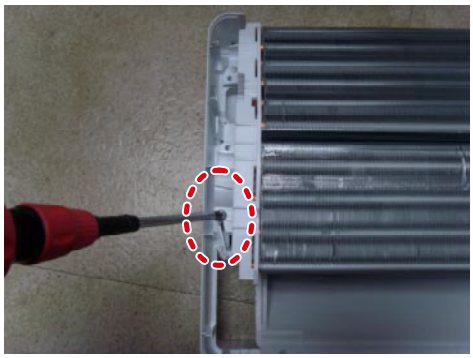
		3) Detach the HOLDER PIPE.	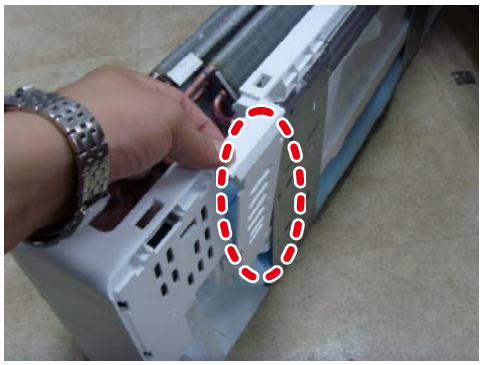
		4) Take off the EVAPORATOR from the main frame.	

No	Parts	Procedure	Remark
6	FAN MOTOR & CROSS FAN	1) Unfasten the screw in the HOLDER-EVAP on the left side of evaporator.(use + Screw Driver)	
		2) unfasten the 3 points screws in the CASE-CONTROL, and then detach the CASE. (use + Screw Driver)	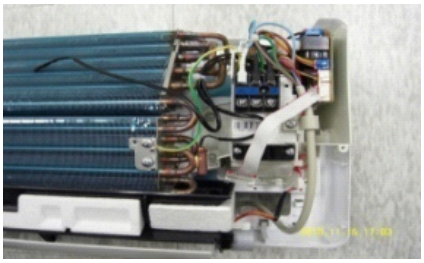
		3) unfasten the screw a little.(use + Screw Driver)	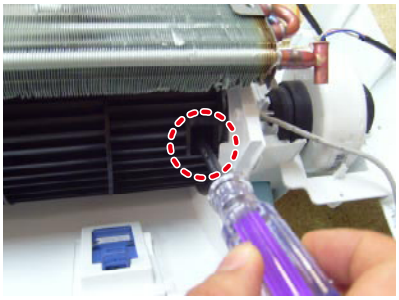
		4) Lift up the evaporator slightly and pull the CROSS-FAN to the left side.	

4-2 Outdoor Unit (AQV**P*AX)

No	Parts	Procedure	Remark
1	Common Work	1) Loosen 1 fixing screw(CCW) of the Cover-Side. (Use +Screw Driver.)	
		2) Loosen each 4 screws(CCW) on both right and left Cabinet Side edges and a fixing screw on the Cabinet Front lower to detach the Cabinet Front. (Use +Screw Driver.)	
		3) Detach the Cabinet Front like the picture on the right side.	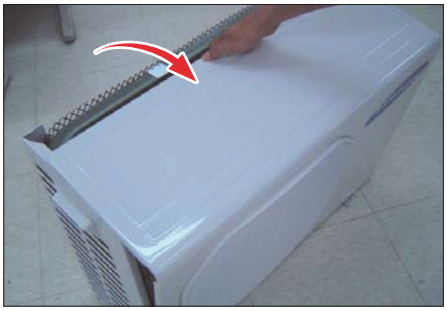
		4) Loosen 1 screw(CCW) fixed to assemble Plate Control Out with Cabinet-Side RH. (Use +Screw Driver.)	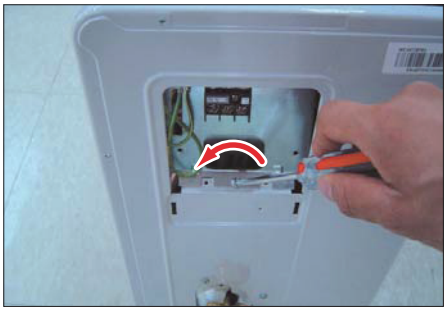

No	Parts	Procedure	Remark
		5) Loosen 2 fixing screws(CCW) on the rear side of Cabinet-Side RH. (Use +Screw Driver.)	
		6) Loosen 3 screws(CCW) fixed to assemble Bracket Valve with Cabinet-Side RH. (Use +Screw Driver.)	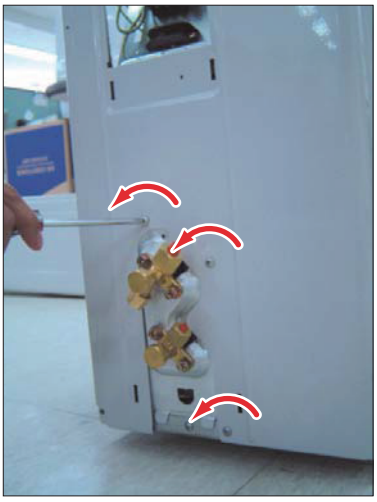
		7) Loosen 2 fixing screws(CCW) of Cabinet Side LF. (Use +Screw Driver.)	

No	Parts	Procedure	Remark
2	Ass'y Control Out	1) Detach the Motor Wire from the PCB of Ass'y Control Out.	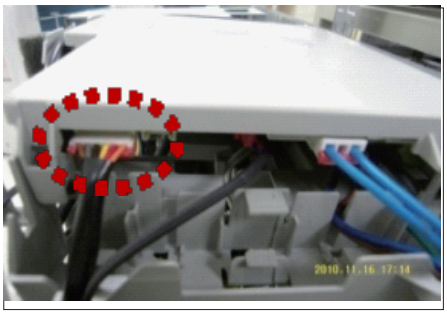
		2) Detach several connectors from the PCB of Ass'y Control Out.	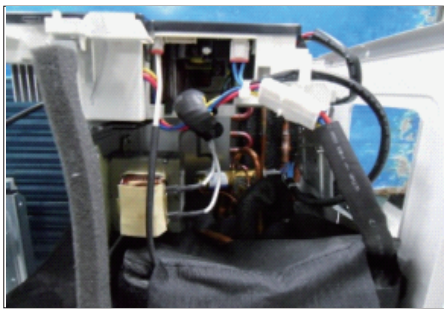
		3) Detach 2 Connect Wires from Reactor.	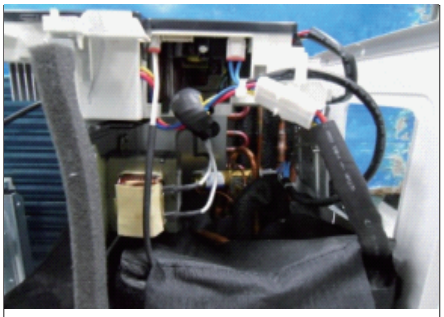
		4) Loosen 1 screw(CCW) fixed to assemble Ass'y Control Out with Partition. (Use +Screw Driver.)	

No	Parts	Procedure	Remark
3	Fan & Motor	1) Release the refrigerant at first. 2) Loosen fixing screw(CW). (Use Monkey Spanner.) 3) Disassemble the pipes in both inlet and outlet with welding torch. 4) Detach the Heat Exchanger.	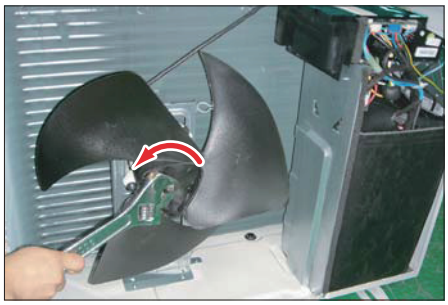
4	Heat Exchanger	1) Loosen 2 fixing screws(CCW) on both sides. (Use +Screw Driver.) 2) Disassemble the pipes in both inlet and outlet with welding torch. 3) Detach the Heat Exchanger. ⚠ Before you disassemble the pipes and Condenser, be sure that there should be no refrigerant remained in the unit.	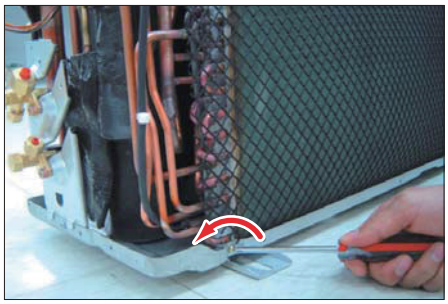
5	Ass'y Valve 4-Way & Ass'y Valve EEV	1) Loosen 4 bolts(CCW) fixed to assemble Valve Service with Bracket Valve like the picture on the right side. (Use Monkey Spanner.) 2) Disassemble the pipes assembled the suction and discharge sides of the Compressor with welding torch.	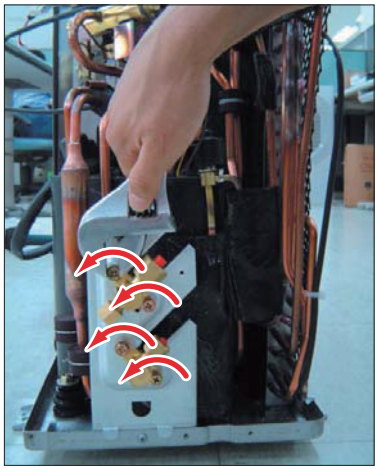
6	Compressor	1) Loosen the Nut(CCW) of Terminal Cover. (Use Monkey Spanner.) 2) Detach the Terminal Cover and detach the Connect Comp Wire from Compressor. 3) Disassemble the Felt Comp Sound. 4) Loosen the 3 bolts(CCW) at the bottom of Compressor like the picture on the right side. (Use Monkey Spanner.)	

4-2 Outdoor Unit (AQV**PSBX*)

No	Parts	Procedure	Remark
1	Common Work	1) Loosen 1 fixing screw(CCW) of the Cover-Side. (Use +Screw Driver.)	
		2) Loosen each 5 screws(CCW) on both right and left Cabinet Side edges and a fixing screw on the Cabinet Front lower to detach the Cabinet Front. (Use +Screw Driver.)	
		3) Detach the Cabinet Upper like the picture.	
		4) Loosen 2 screw(CCW) fixed to assemble Plate Control Out with Cabinet-Side RH. (Use +Screw Driver.)	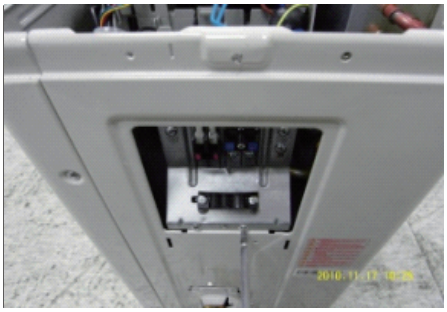

No	Parts	Procedure	Remark
1	Common Work	5) Loosen 2 screw(CCW) on the right side of Cabinet Front. (Use +Screw Driver)	
		6) Loosen 2 screw(CCW) on the left side of Cabinet Front. (Use +Screw Driver)	
		7) Loosen 3 screw(CCW) on the front side of Cabinet Front. (Use +Screw Driver)	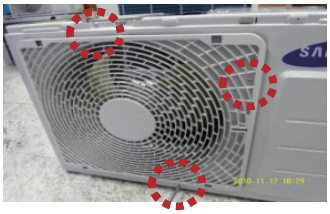

No	Parts	Procedure	Remark
		8) Loosen 3 fixing screws(CCW) on the rear side of Cabinet-Side RH. (Use +Screw Driver.)	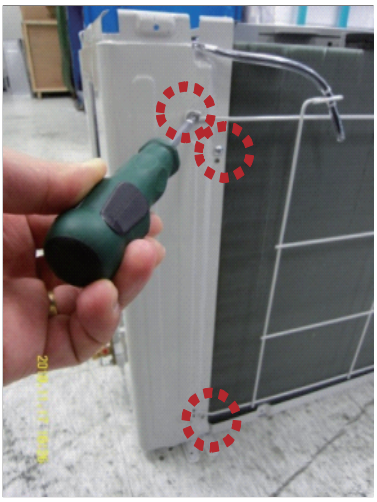
		9) Loosen 3 screws(CCW) fixed to assemble Bracket Valve with Cabinet-Side RH. (Use +Screw Driver.)	

No	Parts	Procedure	Remark
2	Ass'y Control Out	1) Detach the Motor Wire from the PCB of Ass'y Control Out.	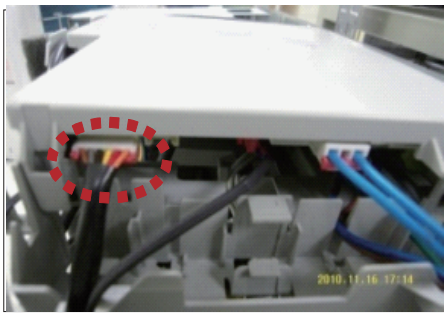
		2) Detach several connectors from the PCB of Ass'y Control Out.	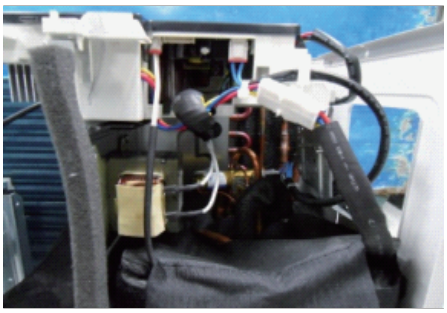
		3) Detach 2 Connect Wires from Reactor.	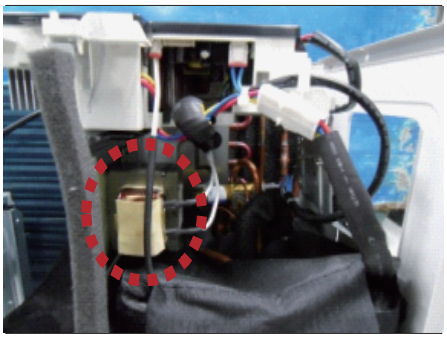
		4) Loosen 1 screw(CCW) fixed to assemble Ass'y Control Out with Partition. (Use +Screw Driver.)	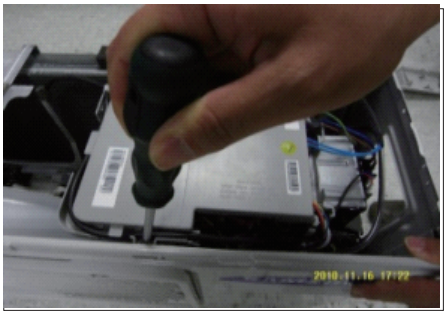

No	Parts	Procedure	Remark
3	Fan & Motor	1) Release Nut at Fan Boss 2) Release 3 screws st Motor Bracket. 3) Detach Motor Wire from the Assy Control Out.	
4	Heat Exchanger	1) Loosen 1 fixing screws(CCW) on both sides. (Use +Screw Driver.) 2) Disassemble the pipes in both inlet and outlet with welding torch. 3) Detach the Heat Exchanger. ⚠ Before you disassemble the pipes and Condenser, be sure that there should be no refrigerant remained in the unit.	
5	Ass'y Valve 4-Way & Ass'y Valve EEV	1) Loosen 4 bolts(CCW) fixed to assemble Valve Service with Bracket Valve like the picture on the right side. (Use Monkey Spanner.) 2) Disassemble the pipes assembled the suction and discharge sides of the Compressor with welding torch.	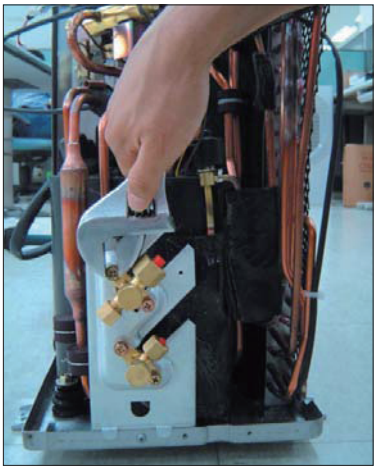
6	Compressor	1) Loosen the Nut(CCW) of Terminal Cover. (Use Monkey Spanner.) 2) Detach the Terminal Cover and detach the Connect Comp Wire from Compressor. 3) Disassemble the Felt Comp Sound. 4) Loosen the 3 bolts(CCW) at the bottom of Compressor like the picture on the right side. (Use Monkey Spanner.)	

12. Troubleshooting

12-1 Items to be checked first

1. The input voltage should be rating voltage ±10% range.
   The air conditioner may not operate properly if the voltage is out of this range.

2. Is the link cable linking the indoor unit and the outdoor unit linked properly?
   The indoor unit and the outdoor unit shall be linked by 5 cables.
   Check the terminals if the indoor unit and outdoor unit are properly linked by the same number of cables.
   Otherwise the air conditioner may not operate properly.

3. When a problem occurs due to the contents illustrated in the table below it is a symptom not related to the malfunction of the air conditioner.

No	Operation of air conditioner	Explanation
1	The OPERATION indication LED(BLUE) blinks when a power plug of the indoor unit is plugged in for the first time.	It indicates power is on. The LED stops blinking if the operation ON/OFF button on the remote control unit is pushed.
2	In a COOL operation mode, the compressor does not operate at a room temperature higher than the setting temperature that the INDOOR FAN should operate. **[In case of heat pump model]** In a HEAT operation mode, the compressor does not operate at a room temperature lower than the setting temperature that indoor fan should operate.	In happens after a delay of 3 minutes when the compressor is reoperated. The same phenomenon occurs when a power is on. As a phenomenon that the compressor is reoperated after a delay of 3 minutes, the indoor fan is adjusted automatically with reference to a temperature of the air blew.
3	Fan speed setting is not allowed in DRY( ) mode.	The speed of the indoor fan is set to LL in DRY mode. Fan speed is selected automatically in AUTO mode.
4	Compressor stops operation intermittently in DRY( ) mode.	Compressor operation is controlled automatically in DRY mode depending on the room temperature and humidity.
5	Timer LED(ORANGE) of the indoor unit lights up and the air conditioner does not operate.	Timer is being activated and the unit is in ready mode. The unit operates normally if the timer operation is cancelled.
6	The compressor stops intermittently in a COOL mode or DRY mode, and fan speed of the indoor unit decreases.	The compressor stops intermittently or the fan speed of the indoor unit decreases to prevent inside/outside air frozen depending on the inside/outside air temperature.
7	**[In case of heat pump model]** Compressor of the outdoor unit is operating although it is turned off in a HEAT mode.	When the unit is turned off while de-ice is activated, the compressor continues operation for up to 9 minutes(maximum) until the deice is completed.
8	**[In case of heat pump model]** The compressor and indoor fan stop intermittently in HEAT mode.	The compressor and indoor fan stop intermittently if room temperature exceeds a setting temperature in order to protect the compressor from overheated air in a HEAT mode.
9	**[In case of heat pump model]** Indoor fan and outdoor fan stop operation intermittently in a HEAT mode.	The compressor operates in a reverse cycle to remove exterior ice in a HEAT mode, and indoor fan and outdoor fan do not operate intermittently for within 20% of the total heater operation

12-2 Fault Diagnosis by Symptom

12-2-1 Communication error↔When

Operation	Timer	GOOD SLEEP
		◑

is displayed

1. Checklist:
   1) Is the communication cable between the indoor unit and outdoor unit connected correctly?
   2) Isn't the power cable and communication cable error?

2. Troubleshooting procedure

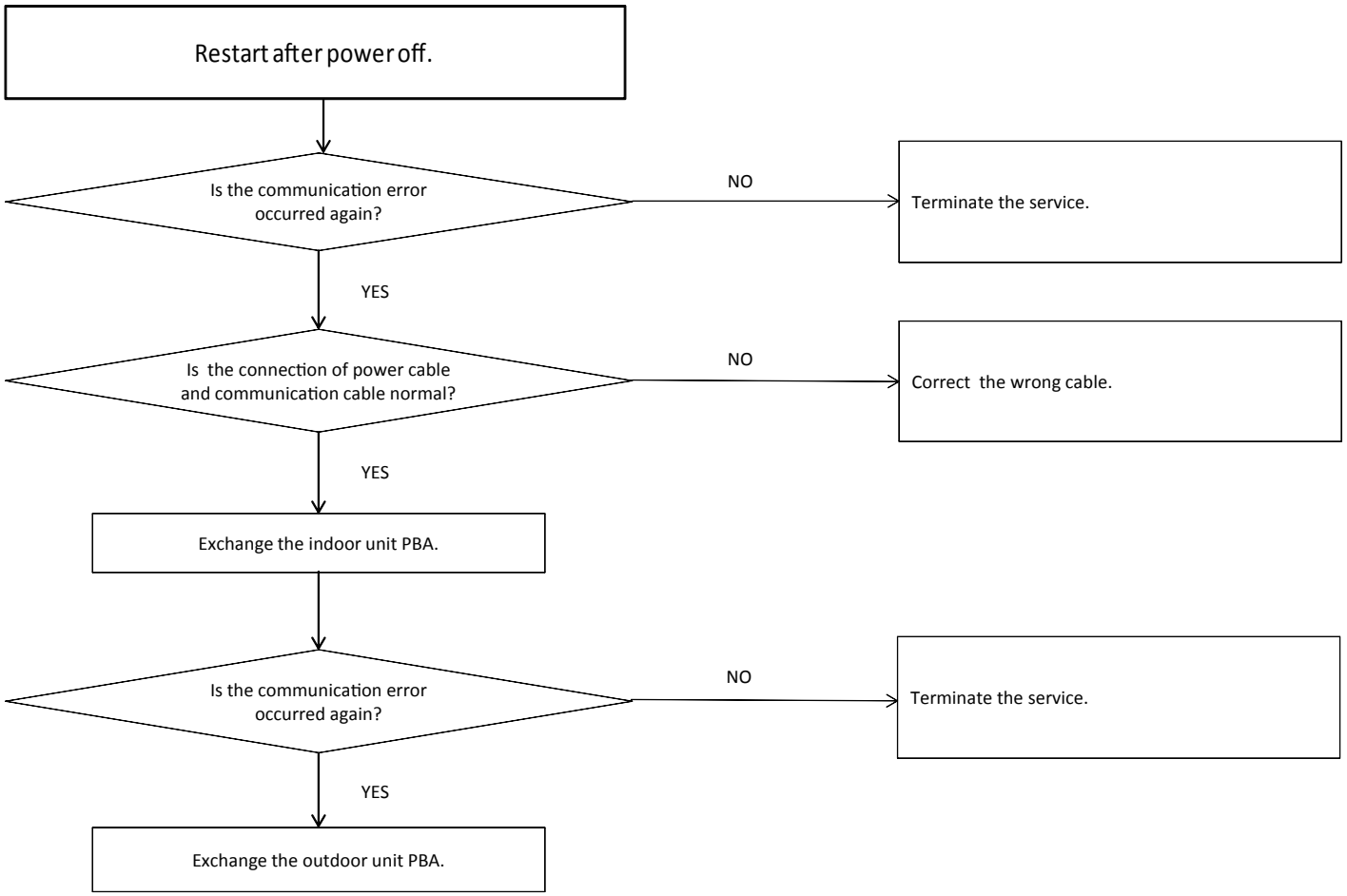

12-2-2 Indoor Temperature Sensor Error↔When 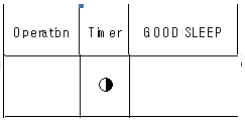 diplayed

1. Checklist :
   1) Is the indoor units temperature sensor connected correctly?

2. Troubleshooting procedure

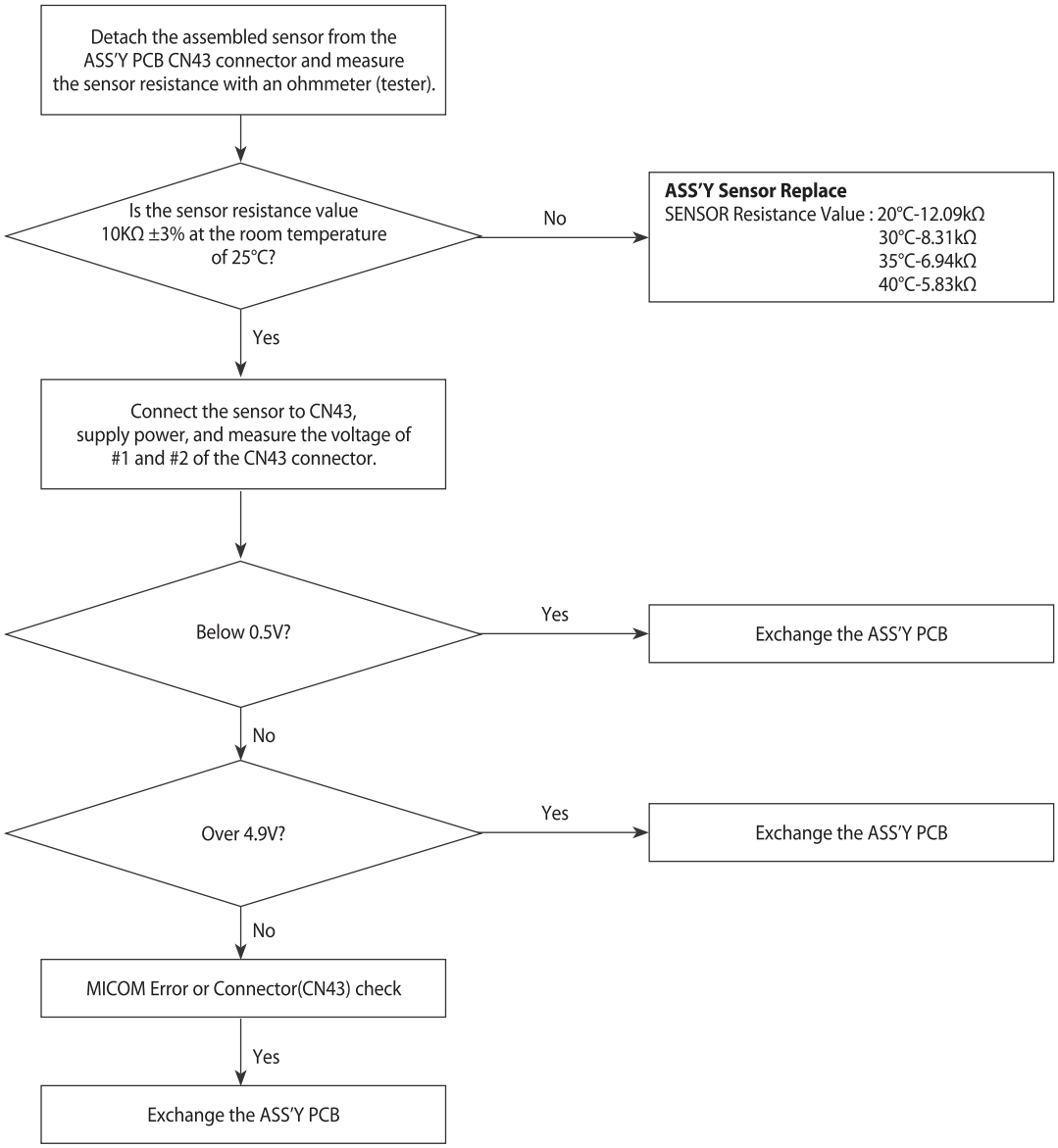

12-2-3 Indoor Heat Exchanger Temperature Sensor Error↔When 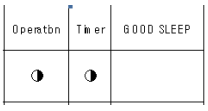 diplayed

1. Checklist :
   1) Is the indoor units temperature sensor connected correctly?

2. Troubleshooting procedure

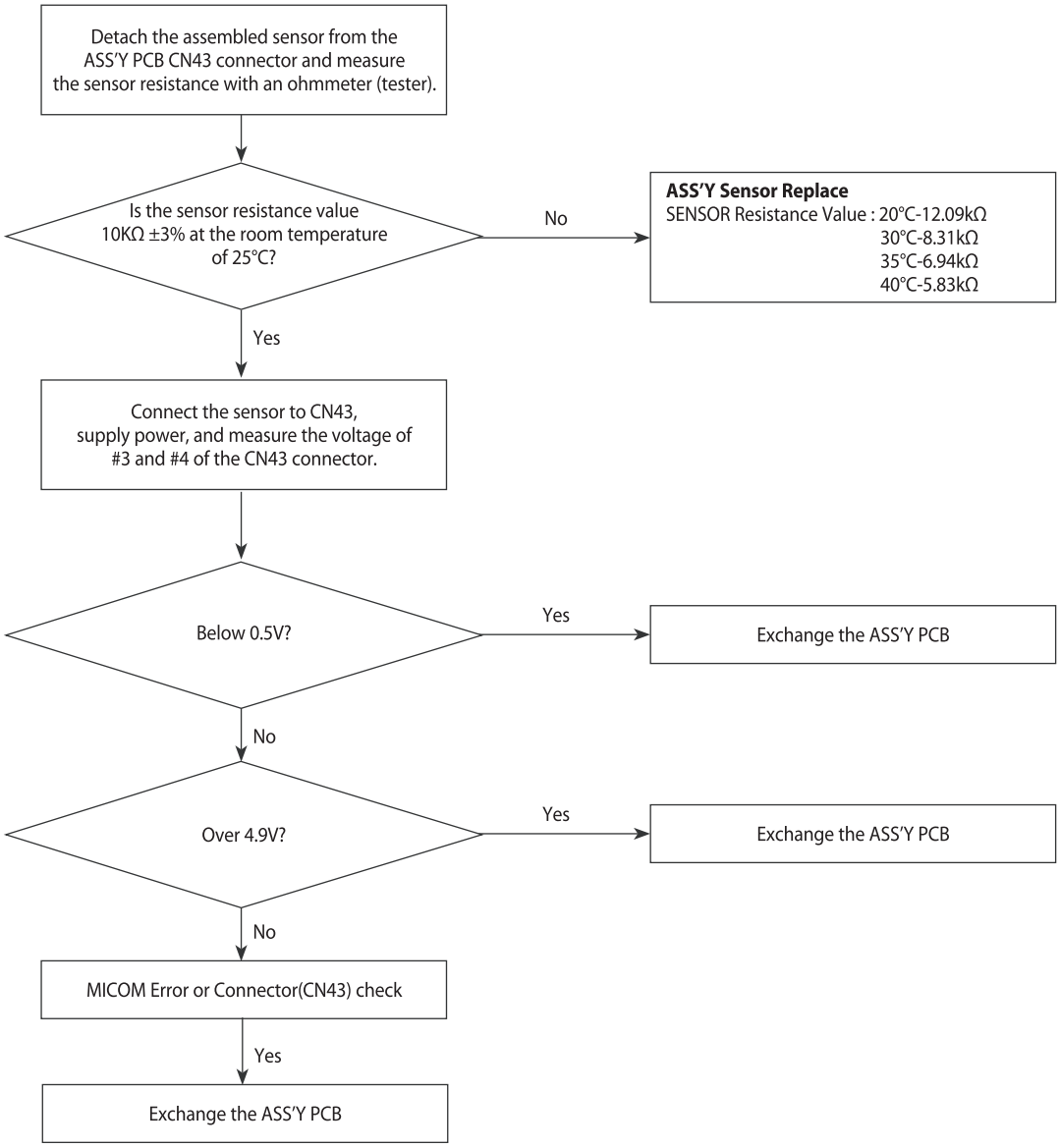

12-2-4 Indoor Fan Motor Speed Detecting Error↔When

Operation	Timer	GOOD SLEEP
		◑

is diplayed

1. Checklist :
   1) Is the indoor unit fan motor properly connected with the connector (CN72)?
   2) Is the AC voltage correct?
   3) Is HALL IC in indoor fan motor properly connected with the connector (CN44)?
   4) Is the running capacitor (CR71) properly connected with PCB board?

2. Troubleshooting procedure

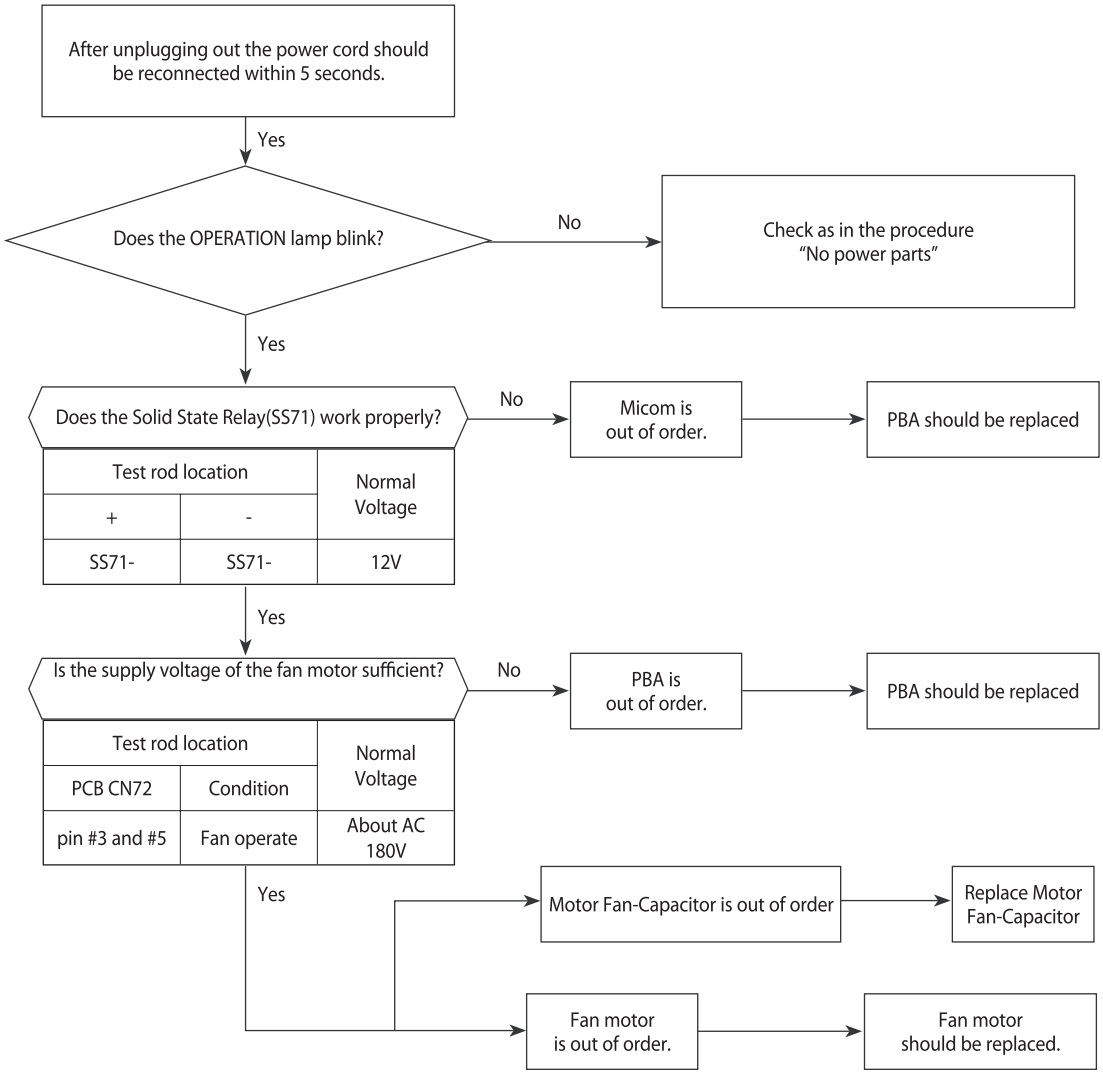

12-2- 6 Outdoor temperature sensor error↔When

Y	G	R
◎	○	◎

is diplayed

1. Checklist :
   1) Is the sensor connector connected correctly?
   2) Is the sensor placed correctly?
   3) Does the both terminal of sensor satisfy the resistance value in accordance with temperature?
   4) Is the resistance value of sensor connection pull_up correct?

2. Troubleshooting procedure

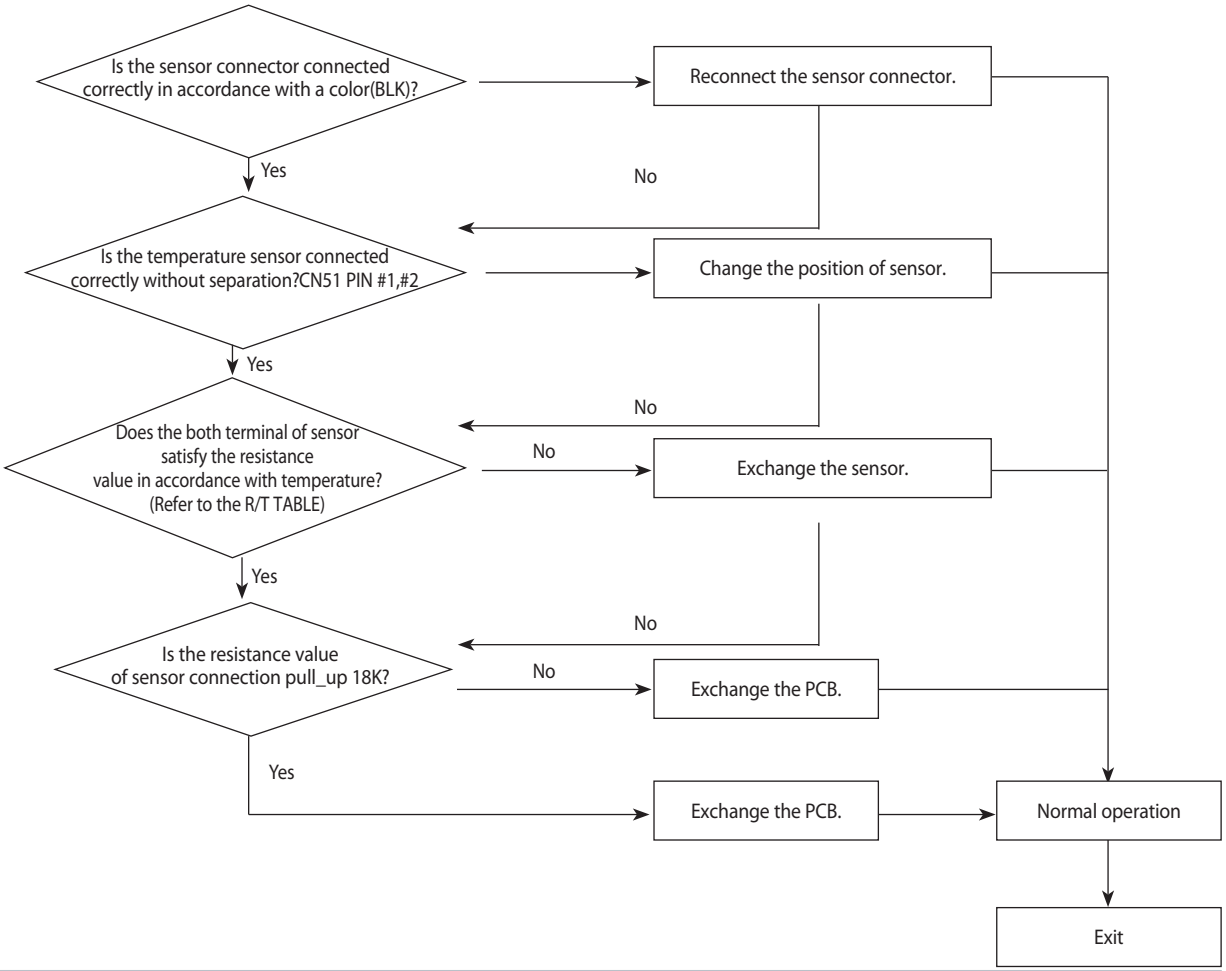

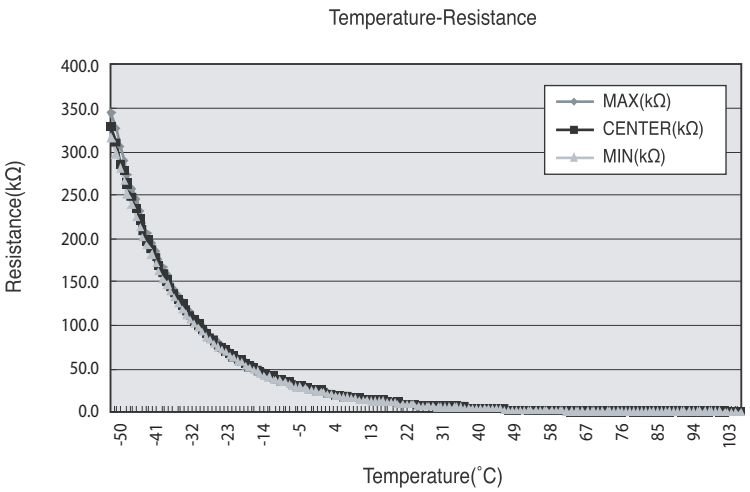

12-2-7 Coil temperature sensor error↔When

Y	G	R
◎	●	◎

is diplayed

1. Checklist :
   1) Is the sensor connector connected correctly?
   2) Is the sensor placed correctly?
   3) Does the both terminal of sensor satisfy the resistance value in accordance with temperature?
   4) Is the resistance value of sensor connection pull_up correct?

2. Troubleshooting procedure

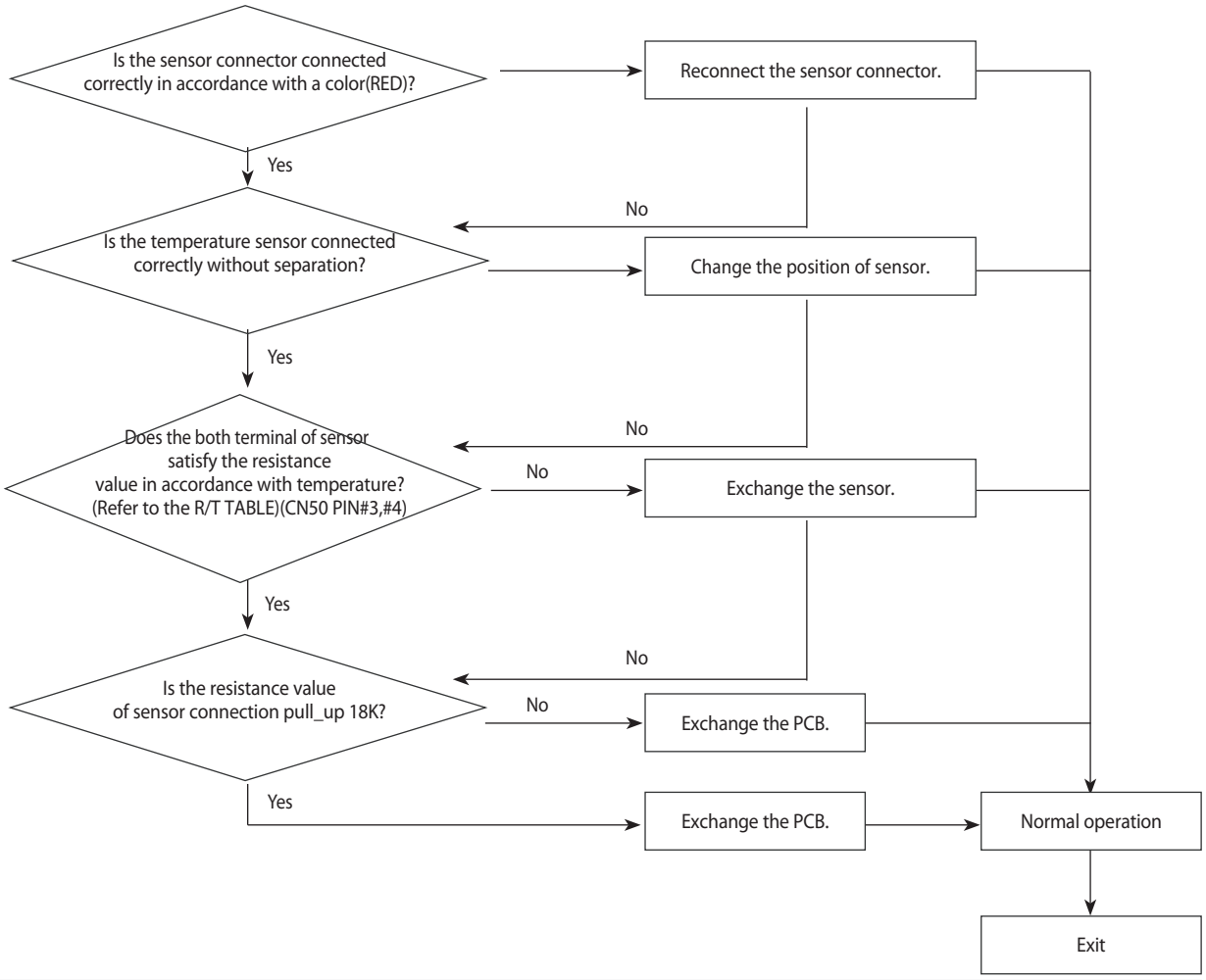

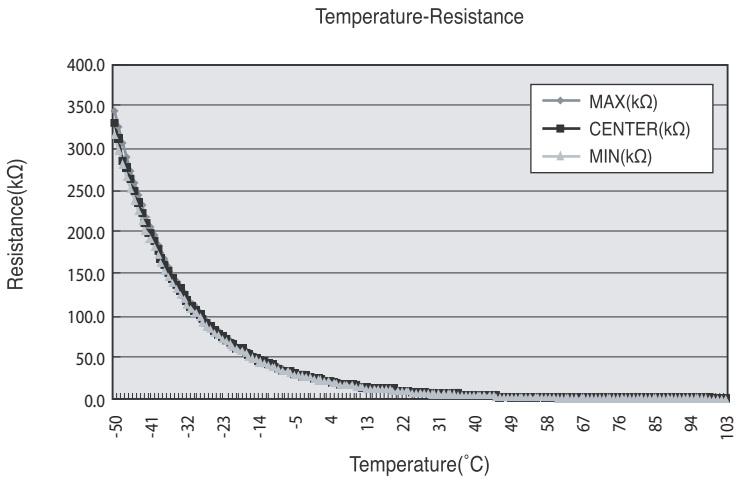

12-2-8 Discharge temperature sensor error↔When

Y	G	R
◎	◎	○

is diplayed

1. Checklist :
   1) Is the sensor connector connected correctly?
   2) Is the sensor placed correctly?
   3) Does the both terminal of sensor satisfy the resistance value in accordance with temperature?
   4) Is the resistance value of sensor connection pull_up correct?

2. Troubleshooting procedure

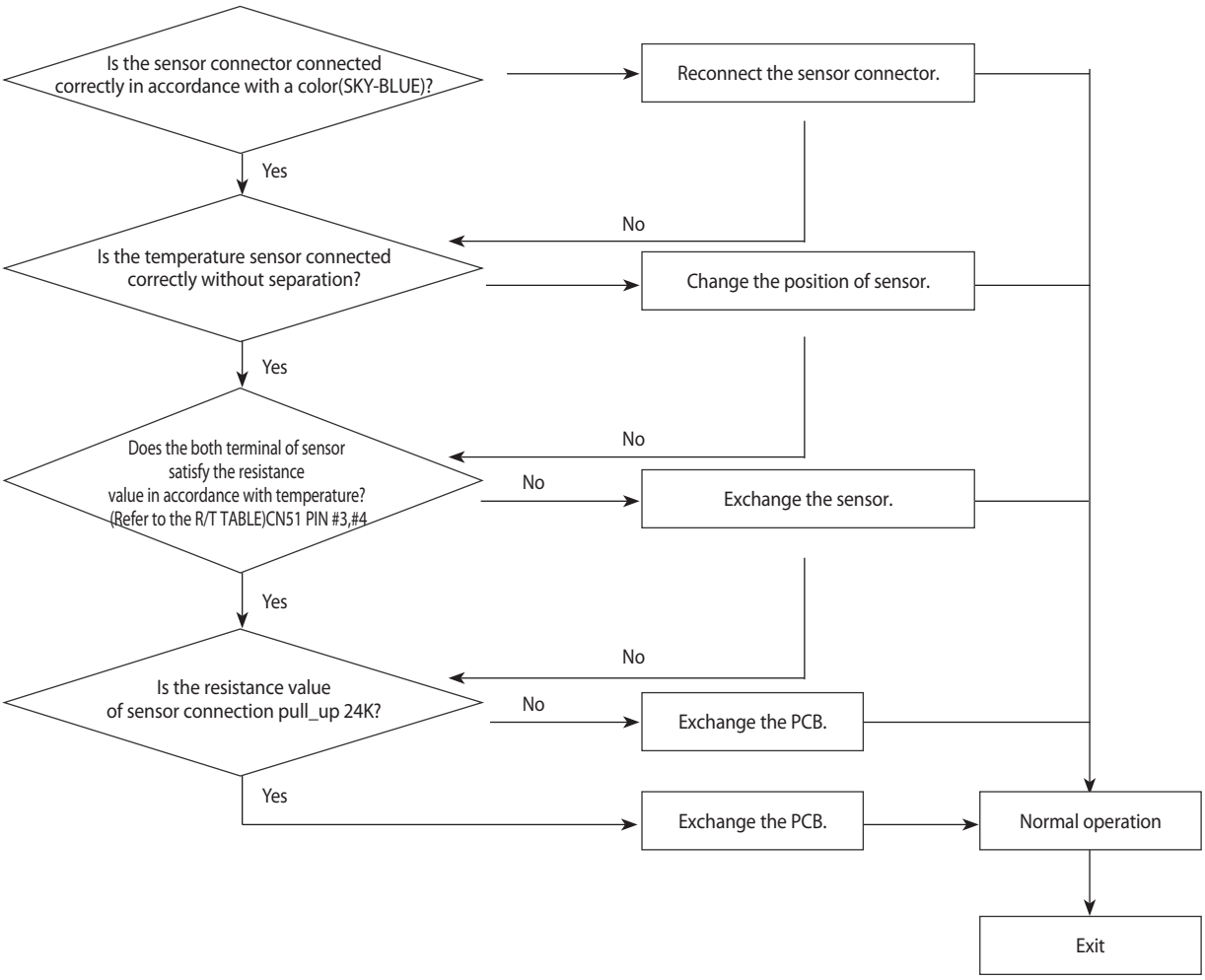

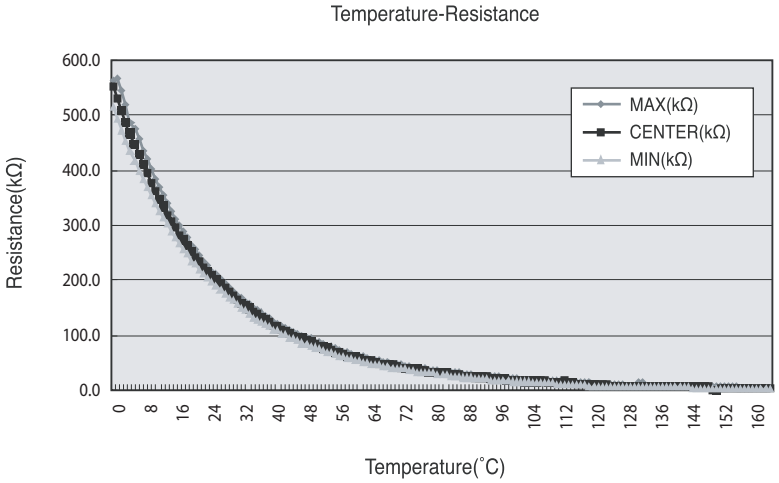

12-2-9 Discharge over temperature sensor error↔When 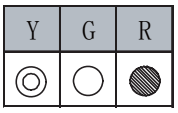 is diplayed

1. Checklist :
   Check the discharge temperature in the outdoor unit

2. Troubleshooting procedure

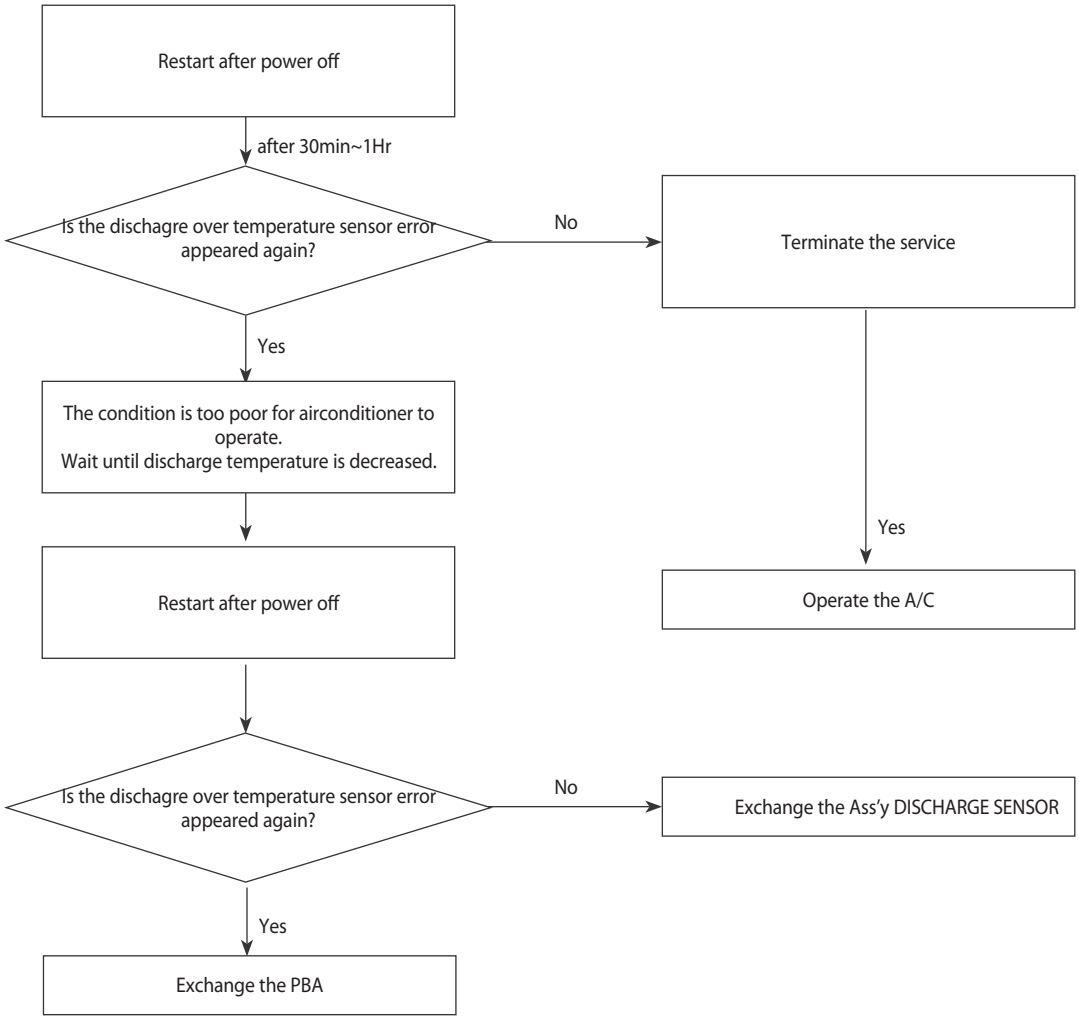

12-2-10 The Outdoor unit Fan error↔When

Y	G	R
●	○	○

is diplayed

1. Checklist :
   1) Are the input power voltage and the power connection correct?
   2) Is the motor wire connected to the outdoor PCB correctly?
   3) Is there no assembly error or none-assembly in the terminal of motor wire connector?
   4) Is there no obstacle at the surrounding of motor and propeller?

2. Troubleshooting procedure

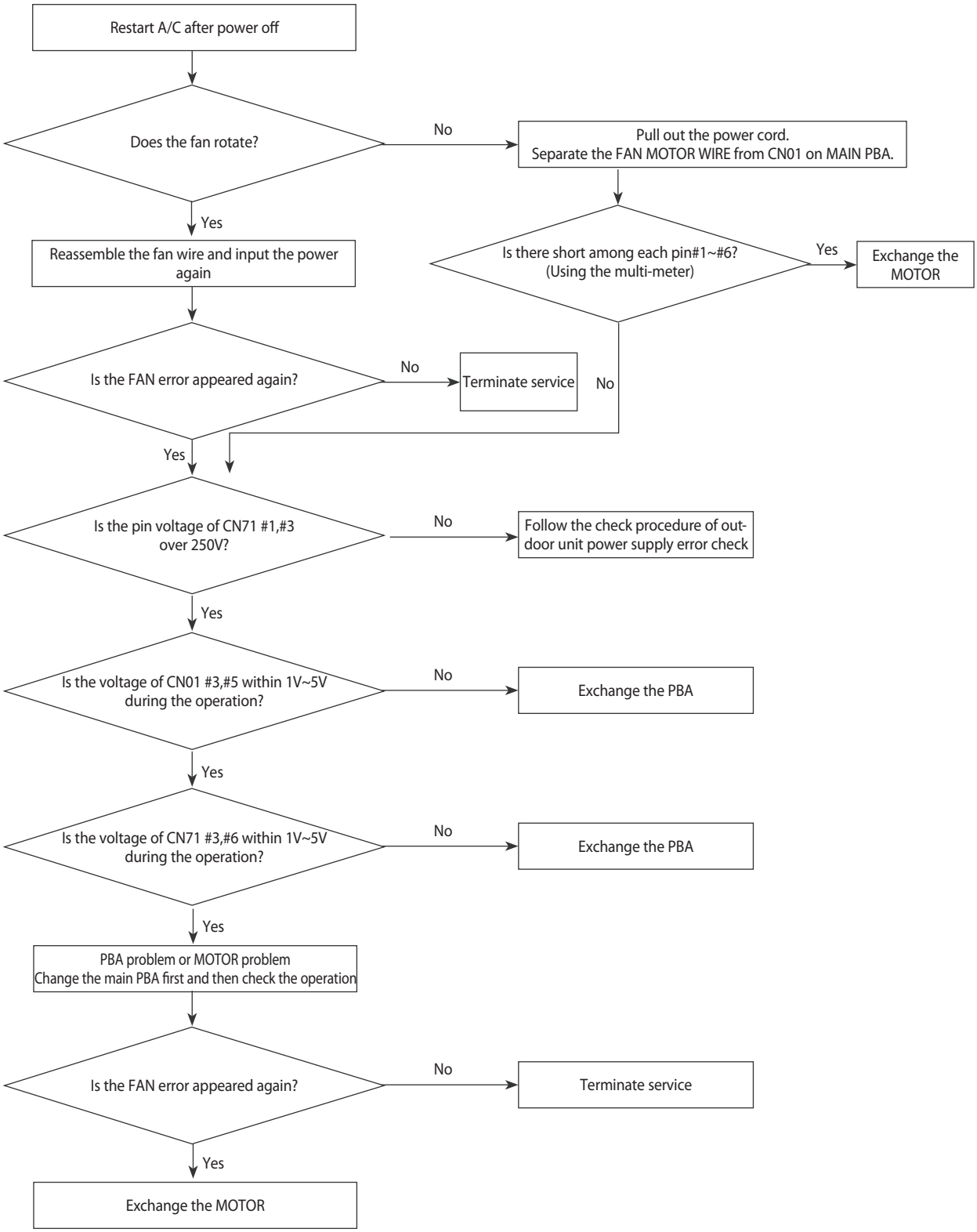

12-2-11 Compressor start error↔When

Y	G	R
○	◎	○

is diplayed

1. Checklist :
   1) Is the connection of cable for the compressor and power?
   2) Is the interphase resistance of compressor normal?

2. Troubleshooting procedure

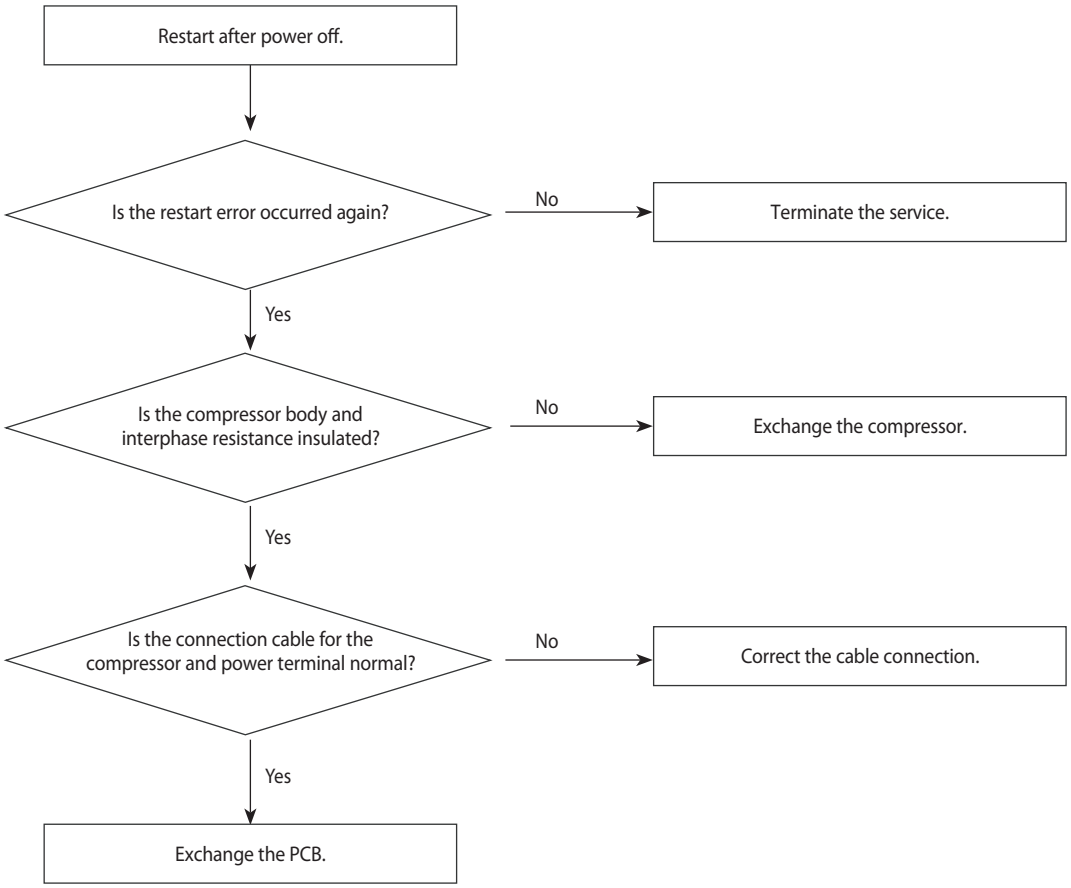

12-2-12 I_Trip error↔When 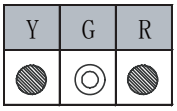 is diplayed

1. Checklist :
   1) Is the Shunt resistance value correct?
   2) Is the condition of surrounding temperature abnormal overload?
   3) Is there any problem as like the temperature sensor separation or measurement value error?
   4) Is the interphase resistance of compressor normal?

2. Troubleshooting procedure

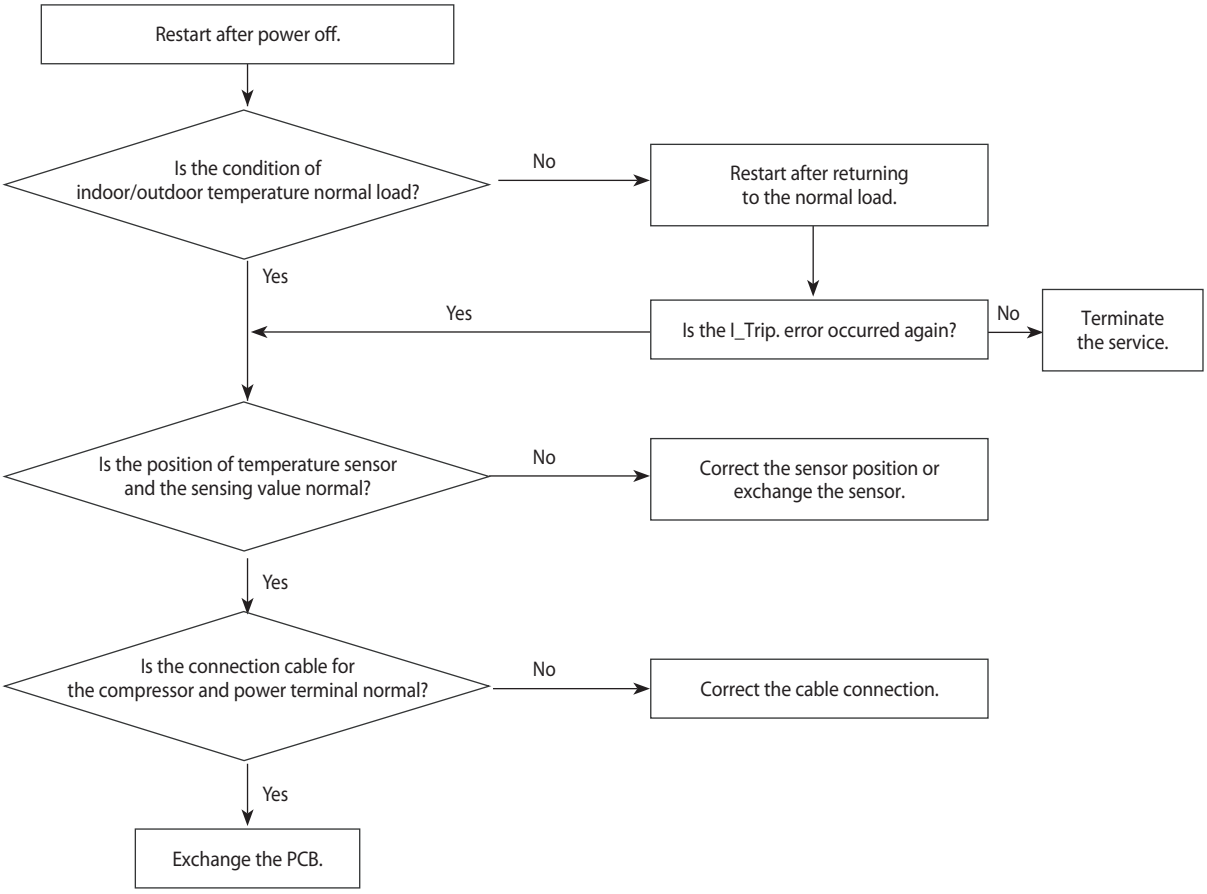

12-2-13 O.C.(Over Current) error↔When

Y	G	R
○	○	◎

is diplayed

1. Checklist :
   1) Is the Shunt resistance value correct?
   2) Is the condition of surrounding temperature abnormal overload?
   3) Is there any problem as like the temperature sensor separation or measurement value error?
   4) Is the interphase resistance of compressor normal?

2. Troubleshooting procedure

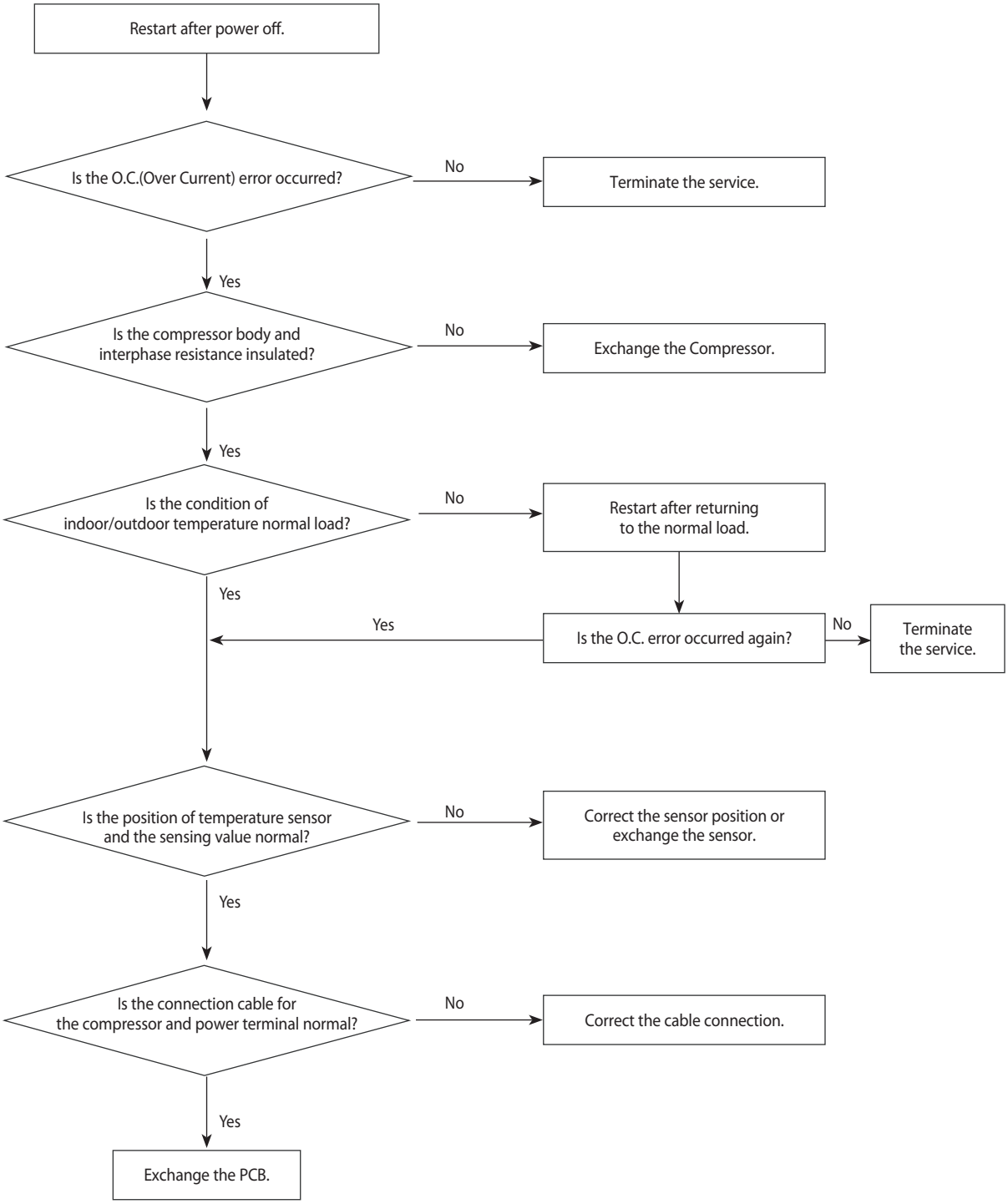

12-2-14 Comp Rotation error↔When 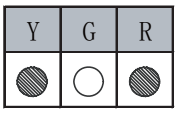 is diplayed

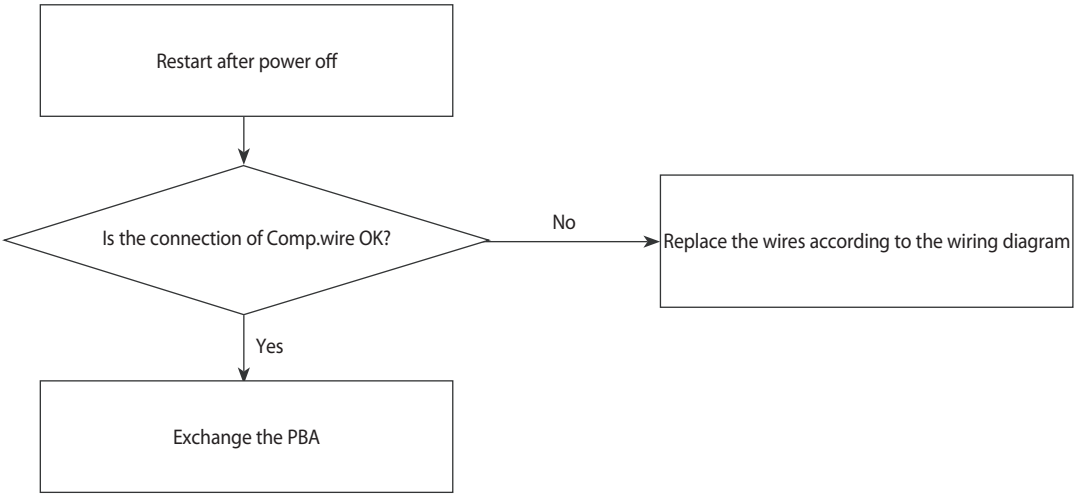

12-2-15 Current Sensor error↔When 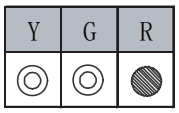 is diplayed

1. Checklist :
   1) Ils there no short or open in every component around IC451 and IC452?
2. Troubleshooting procedure

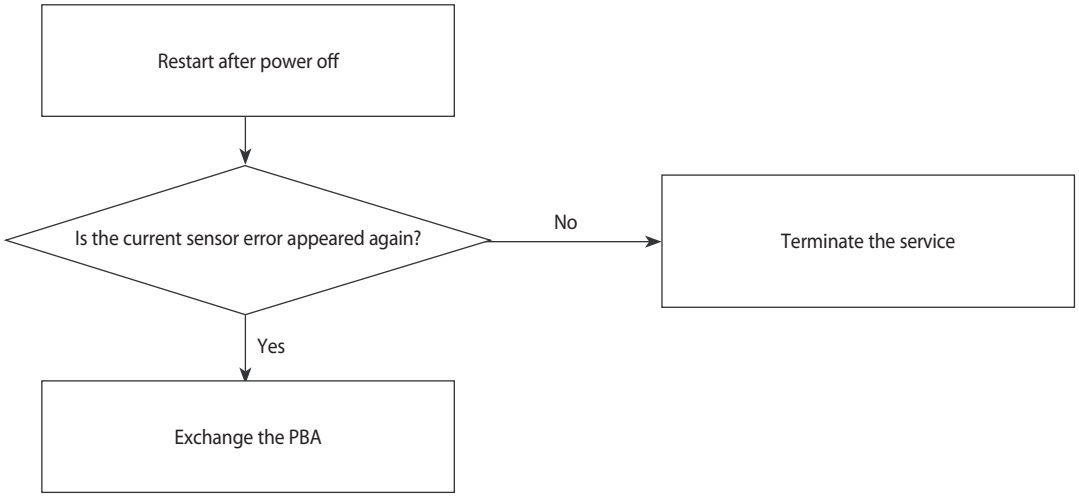

12-2-16 DC-Link voltage sensor error↔When 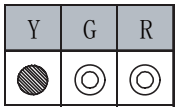 is diplayed

1. Checklist :
   1) Is the voltage ofi ndoor unit terminal block N(1),1 correct after power supply?
   2) Is the capacitor(C101, C102, C103) for DC-Link assembled in accordance the specification?(Outdoor PBA)
   3) Are R113,R114,R115 470 Kohm?
   4) Is R116 14.3Kohm?

2. Troubleshooting procedure

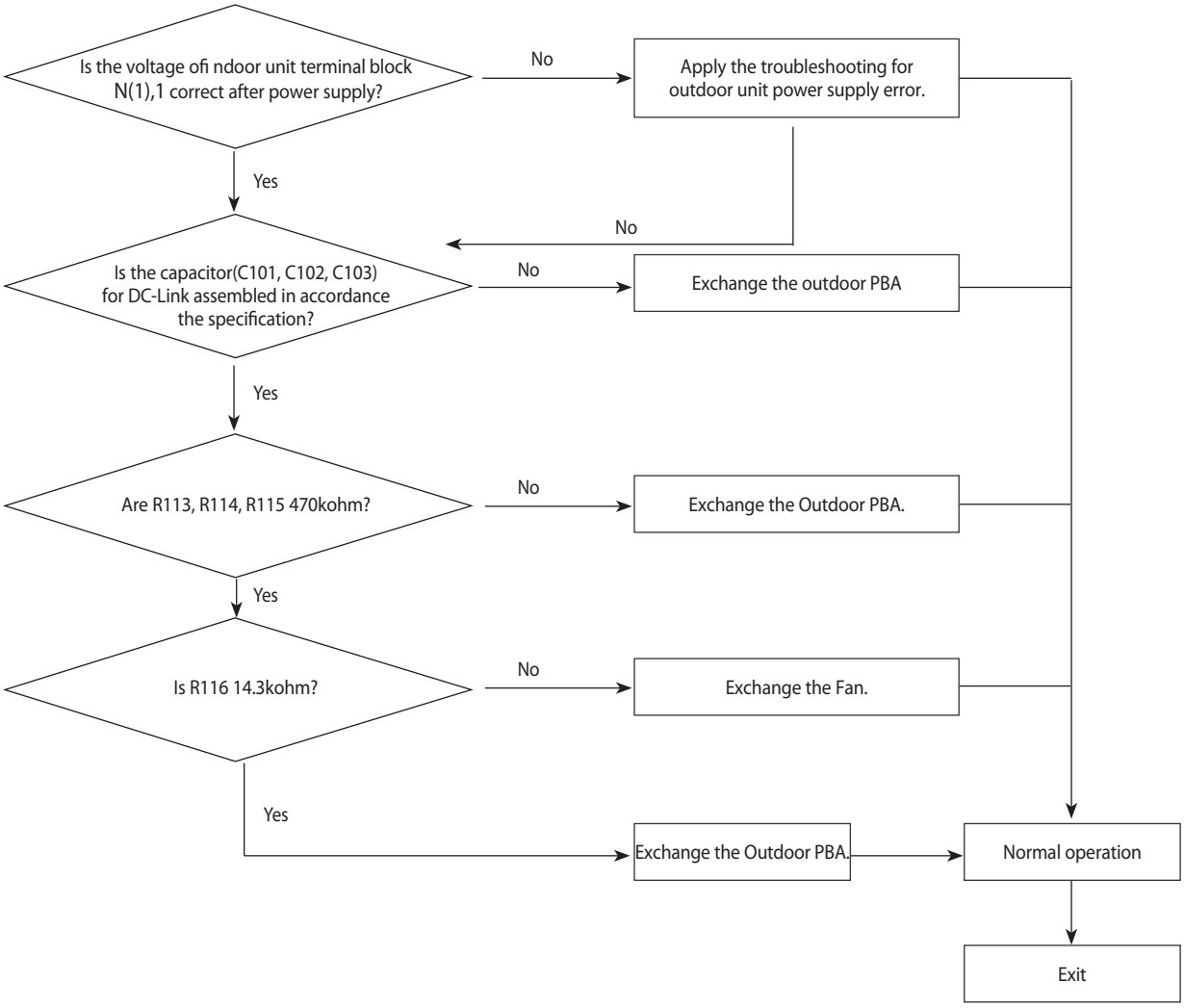

12-2-17 OTP error↔When 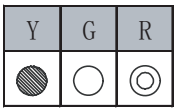 is diplayed

1. Checklist :
   1) Check the IC701's soldering status. (Is there any open or short?)
2. Troubleshooting procedure

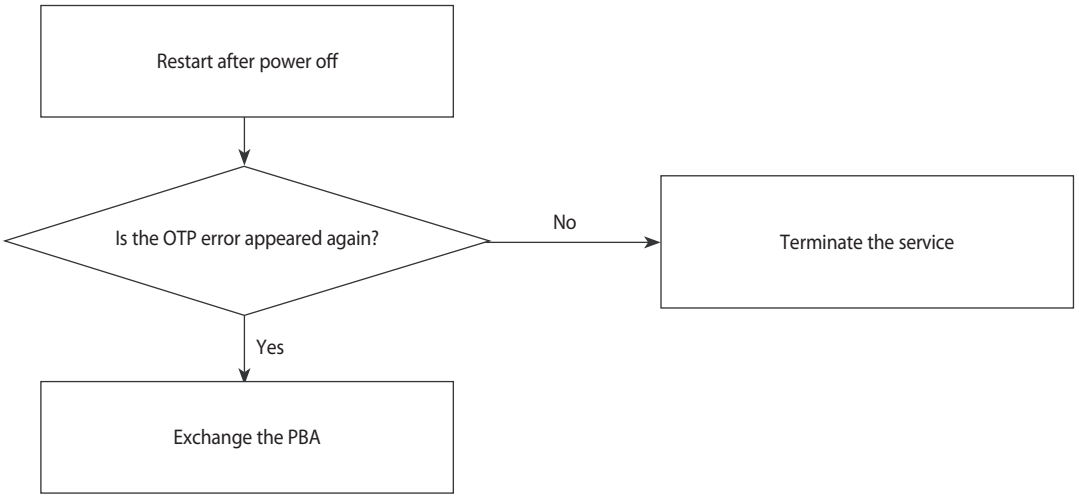

12-2-18 AC Line Zero Cross Signal out error↔When 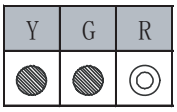 is diplayed

1. Checklist :
   1) Check the power condition at customer's house (Is there any power noise?)
   2) Have been there power failure?
2. Troubleshooting procedure

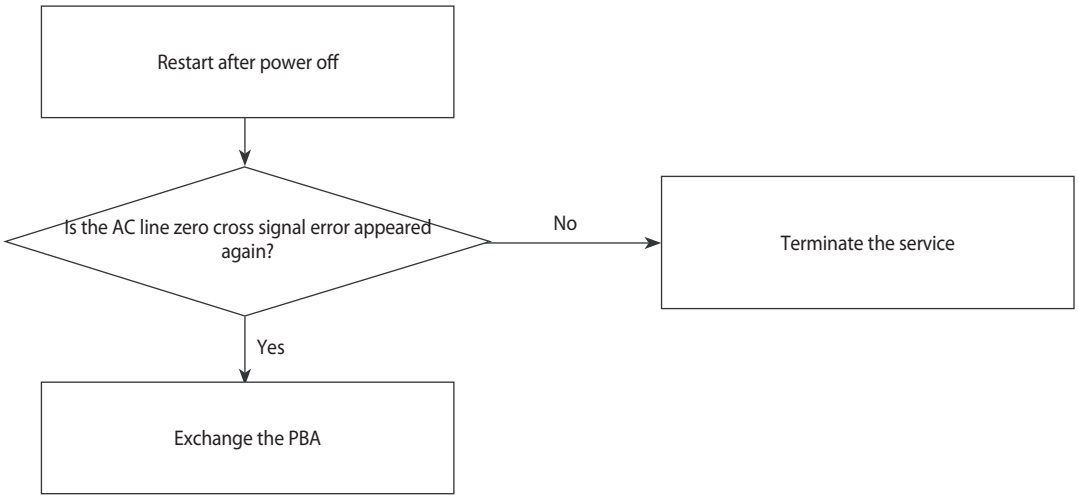

12-2-19 Operation condition secession error ↔When 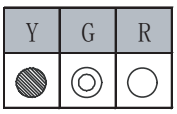 is diplayed

1. Checklist :
   1) Check the temperature around the outdoor unit.

2. Troubleshooting procedure

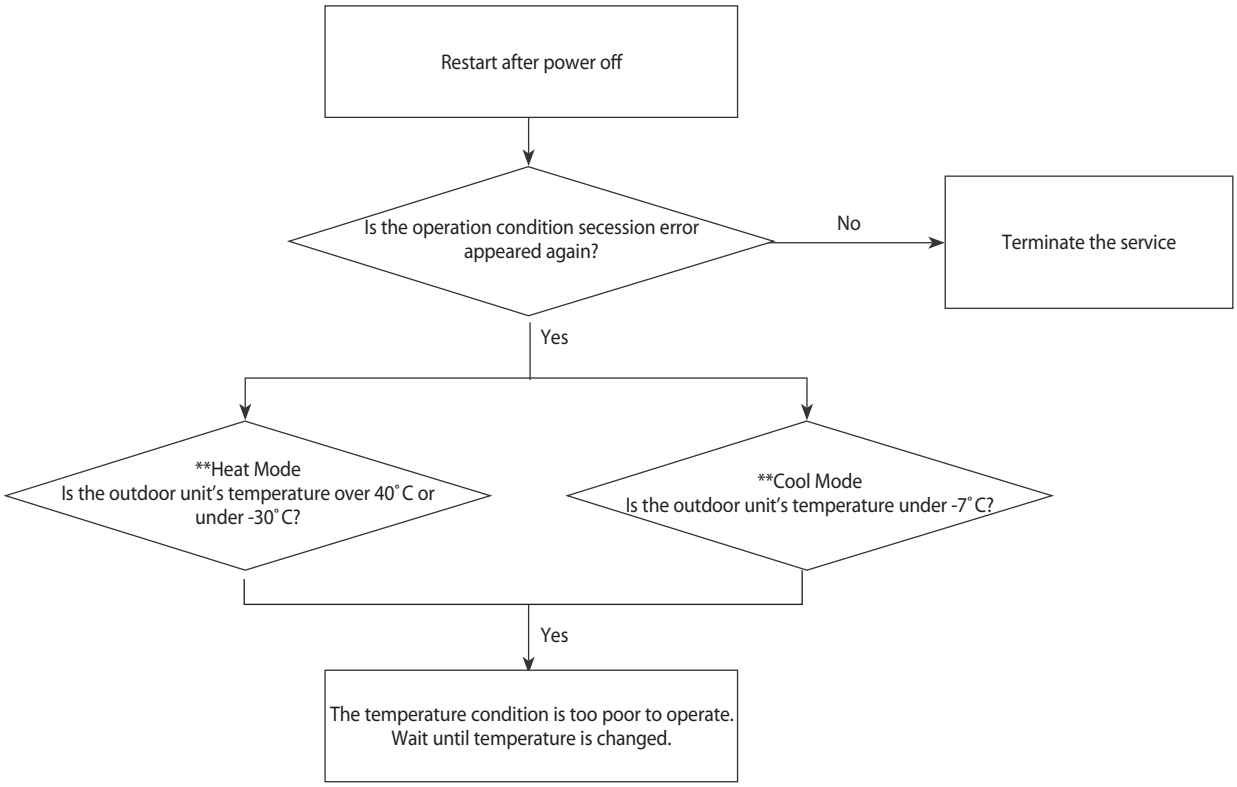

12-2-20 capacity miss match error↔When 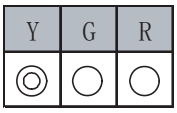 is diplayed

1. Checklist :
   1) Check the Btu between indoor unit and outdoor unit
   2) Check the indoor unit's option code and outdoor unit's EEPROM data.
2. Troubleshooting procedure

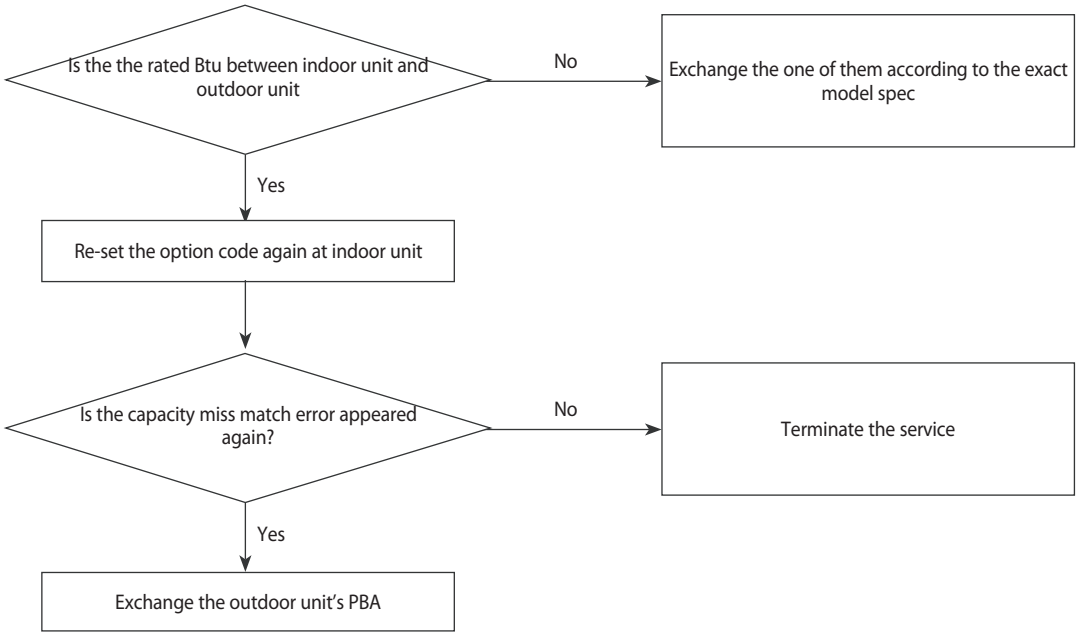

12-2-21 DC-Link Voltage under/over error

1. Checklist :
   1) Is the power voltage normal?
   2) Is the voltage off ront and back terminal ofi ndoor power relay normal?
   3) Is the resistance value for DC Link voltage detection NORMAL?
   4) Is the resistance value of DC Link discharge normal?
   5) Is the appearance of DC Link Capacitor normal?

2. Troubleshooting procedure

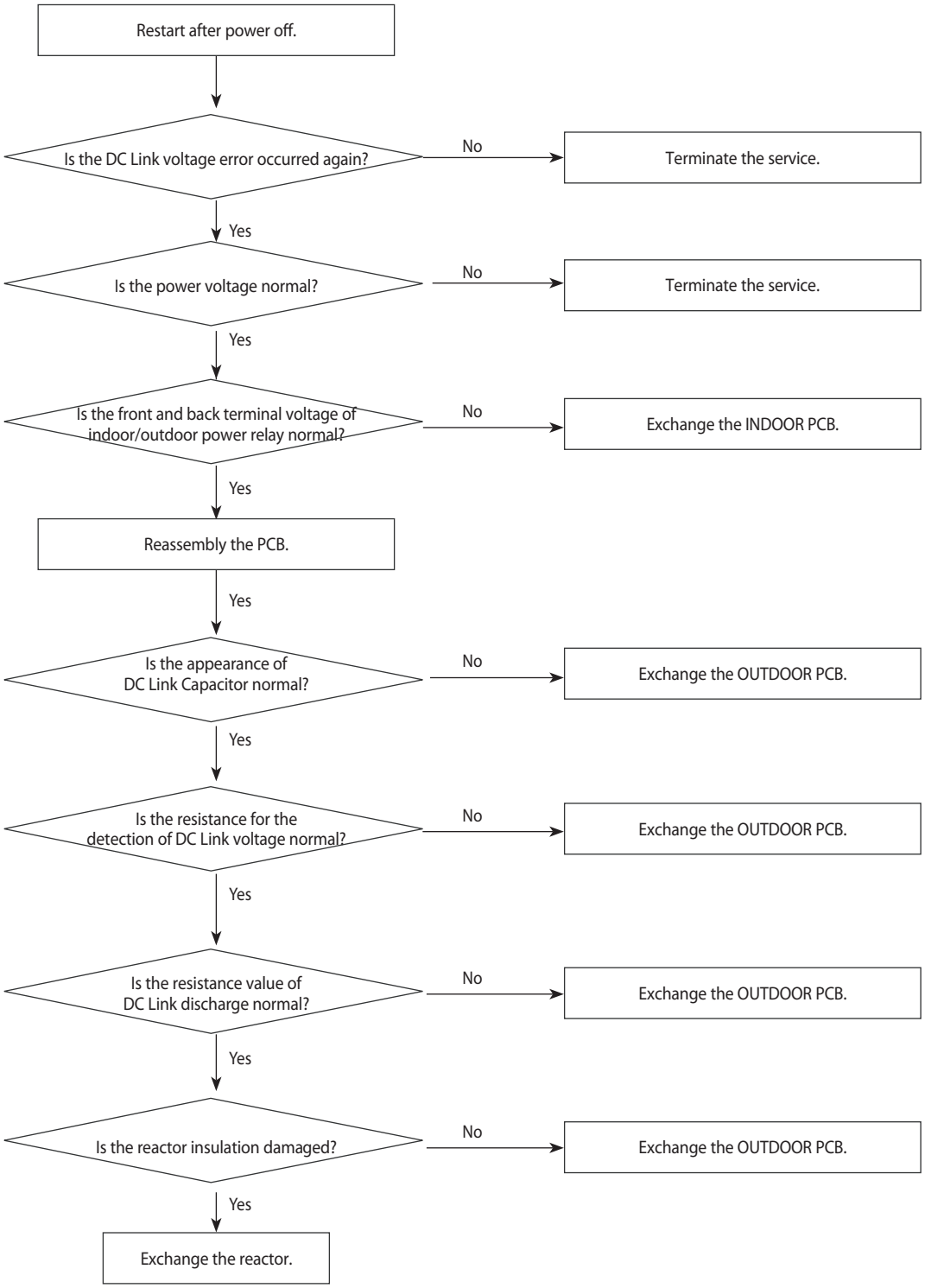

12-2-22 No Power (completely dead)-Initial diagnosis (Not displayed)

1. Checklist :
   1) Is input voltage normal?
   2) Is AC power linked correctly?
   3) Is input voltage of DC regulator IC KA7805 (IC02) normal? (11VDC-12.5VDC)
   4) Is output voltage of DC regulator IC KA7805 (IC02) normal? (4.5VDC-5.5VDC)

2. Troubleshooting procedure

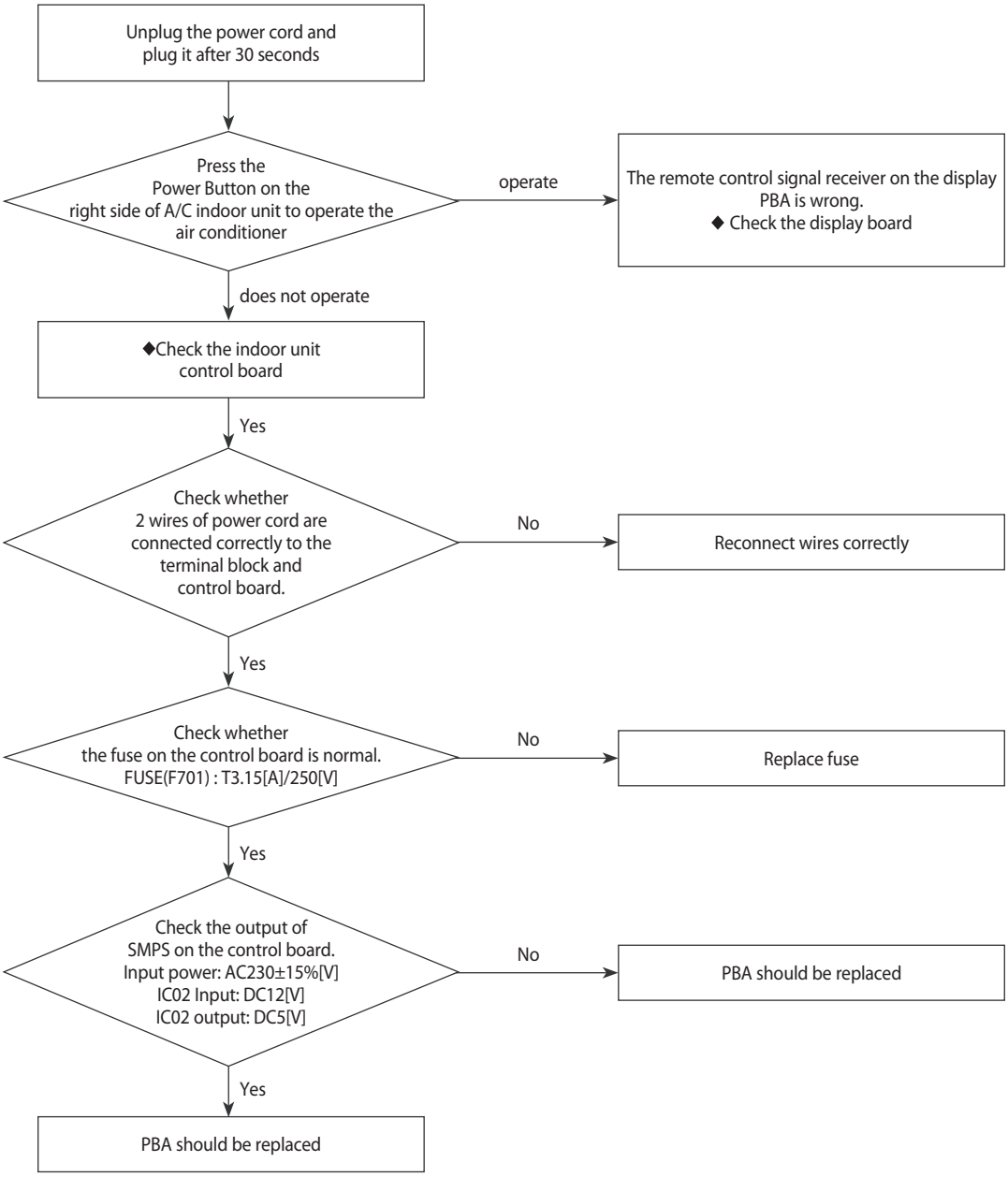

12-2-23 The Outdoor unit power supply error (Not displayed)

1. Checklist :
   1) Are the input power voltage and the power connection correct?
   2) Is there no Fuse short in the indoor unit and outdoor unit?
   3) Is the cable connected correctly between the indoor unit and outdoor unit in order.
   4) Is the wire connected correctly to the terminal block of the indoor unit and outdoor unit?

2. Troubleshooting procedure

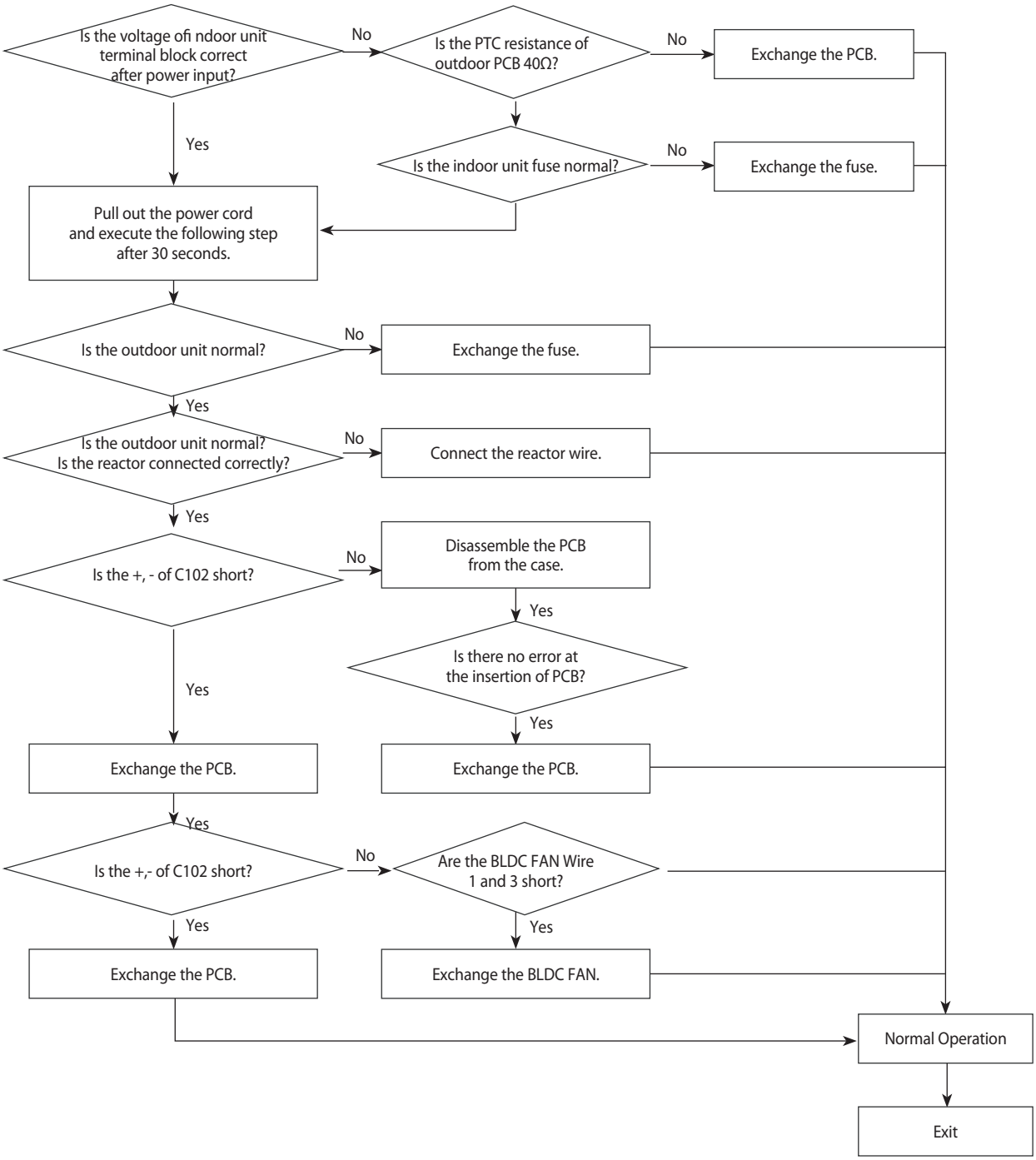

12-2-24 When the Up/Down Louver Motor Does Not Operate. (Initial Diagnosis) (Not displayed)

1. Checklist :
   1) Is input voltage normal?
   2) Is the Up/Down louver motor properly connected with the connector (CN61)?

2. Troubleshooting procedure

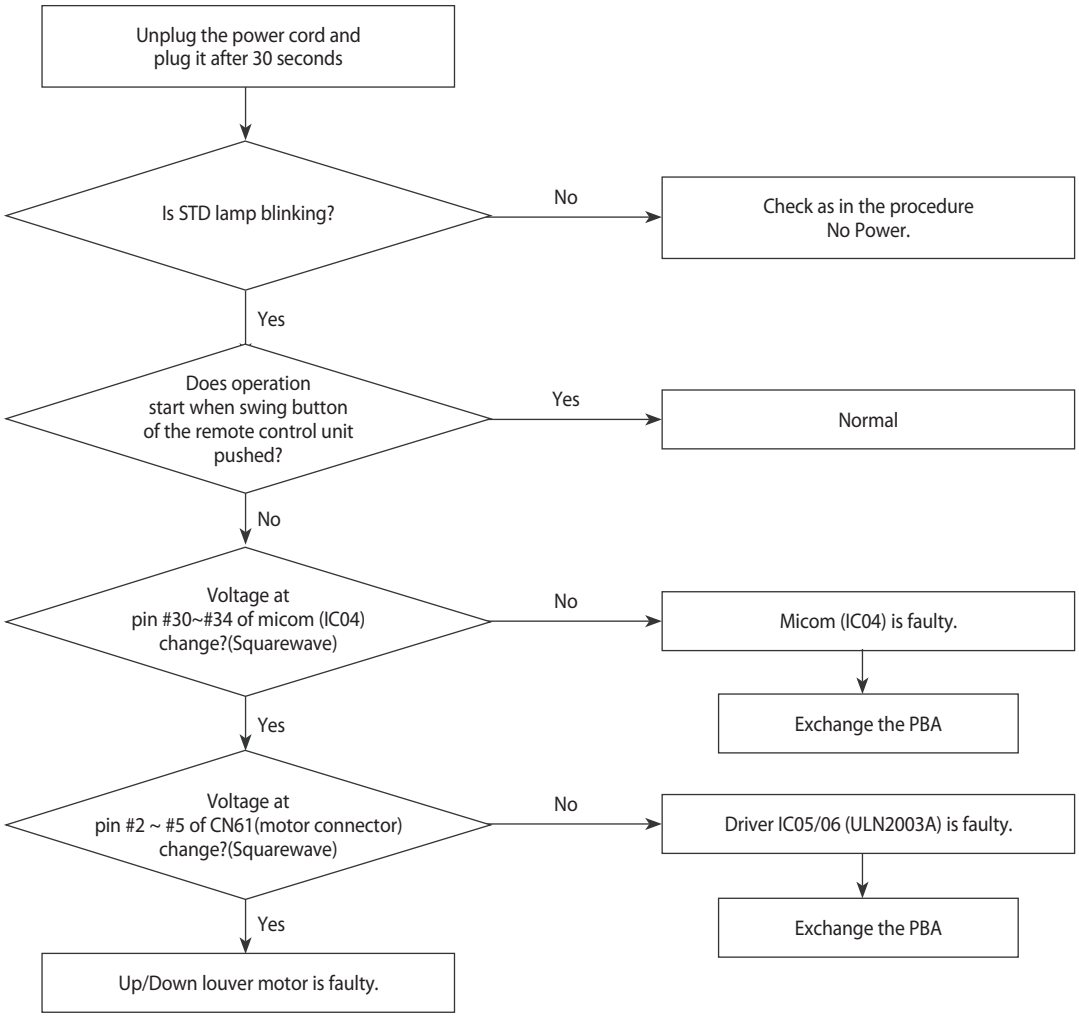

12-2-25 When the remote control is not receiving

1. Check if the connector was normally assembled.

2. Put the set in operation and check the voltage of No.14and No.16of the main PCB CN91 while operating the remote control. When the voltage descends below 3V, the assembly module PCB is normal and the main PCB is poor. Then replace the main PCB.

3. Replace the assembly module PCB because the module PCB is poor if the voltage between No.14and No.16of CN91 maintains 5V after the remote control starts operation.

12-3 PCB Inspection Method

12-3-1 Pre-inspection Notices

1. Check if you pulled out the AC power plug when you eliminate the PCB or front panel.
2. Don't hold the PCB side not impose excessive force on it to eliminate the PCB.
3. Don't pull the lead wire but hold the whole housing to connect or disconnect a connector to the PCB.
4. In case of outdoor PCB disassembly, check first the complete discharge of condenser (C103) after 30 seconds power off.

12-3-2 Inspection Procedure

1. Check connector connection and peeling of PCB or bronze coating pattern when you think the PCB is broken.
2. The PCB is composed of the 3 parts.
   - Indoor Main PCB Part : MICOM and surrounding circuit, relay, room fan motor driving circuit and control circuit, sensor driving circuit, power circuit of DC12V and DC5V, and buzzer driving circuit.
   - Display part : LED lamp, Switch, Remocon module
   - Outdoor Main PCB part : MICOM and surrounding circuit. IPM and PFC circuit and control circuit.
   - EMI PCB Part : Line filter and Noise Capacitor, Varistor

12-3-3 Indoor Detailed Inspection Procedure

No	Procedure	Inspection Method	Cause
1	Plug out and pull the PCB out of the electronic box. Check the PCB fuse.	1) Is the fuse disconnected?	• Over current • Indoor Fan Motor Short • AC Part Pattern Short of the MAIN PCB
2	Supply power. If the operating lamp twinkles at this time, the above 1)~3) have no relation.	Checking the power voltage.	
		1) Is the DB71 input voltage AC200V~AC240V?	• Power Cord is fault, Fuse open. Wrong Power Cable Wiring, AC Part is faulty.
		2) Is the voltage between both terminals of the C104 on the 2nd side of the transformer DC12V ±0.5V?	• Switching Trans or Power Circuit is faulty
		3) Is the voltage between both terminals of OUT and GND of IC19(KA78L05) DC5V ±0.5V?	• Power Circuit is faulty, Load Short
3	Press the ON/OFF button.	Checking the power voltage.	
		1) Is the voltage over AC180V being imposed on terminal #3 and #5 of the fan motor connector(CN72)?	• Relay(RY71) Coil Disconnection, IC05 is faulty
		2) Check the voltage of both terminals of terminal block 1 and N(1) after 3 minute operation.: AC220V	• Relay(RY71) Contact is faulty
4	Press the ON/OFF button. 1. FAN Speed [High] 2. Continuous Operation	1) Is the voltage over AC180V being imposed on terminal #3 and #5 of the fan motor connector(CN72)?	• Fan Motor of the indoor is faulty
		2) The fan motor of the indoor unit doesn't run.	• Fan Motor Connector(CN72) is faulty
		3) The power voltage between terminal #3 and #5 of the connector(CN72) is 0V.	• ASS'Y Main PCB is faulty

12-3-4 Outdoor Detailed Inspection Procedure

No	Procedure	Inspection Method	Cause
1	Wait 30 seconds over after disconnecting the power cable Check the outdoor PCB.	1) Is C101 discharged? 2) Is the resistance of both terminals of C101 opened? 3) Is the fuse of EMI PCB normal? 4) Is the reactor wire connected?	• Over Current • Inner short of PCB • BLDC FAN Motor Error
2	Check the Outdoor unit PCB.	1) Is R701 200ohm? 2) Does ry74 operate normally? (IC05 ⊠ 16:0V, 1:5V) 3) Is the fuse(F701) normal? 4) Is the Sub PCB assembled normally?	• Outdoor PCB Error • SUB Relay(RY74) Error • IC05 Error • Indoor PCB Error
3	Check the LED lighting after power supply.	1) Normal: Red: Light On, Green: Flickering, Yellow: Light Off? 2) Is the voltage of C101 250V over? 3) Is the input of IC19 8V, and the output 5V? 4) Recheck after disassembling BLDC FAN Wire.	• Inner short of outdoor PCB • Wrong assembly of outdoor PCB • BLDC FAN Error
4	Check the condition of indoor ⊠ outdoor connection cable.	1) Is the green LED light on once per second? 2) Is the indoor ⊠ outdoor connection able connected in order? 3) Is the grounding wire connected to the both of indoor ⊠ outdoor unit? 4) Is the voltage of terminal block N(1), 225V?	• Wrong connection of Indoor/Outdoor wiring • Wrong assembly of outdoor communication circuit
5	Check the Comp Wire.	1) Is it connected red, blue, and yellow in order in counterclockwise. 2) Are the valve and its installation condition good? 3) Is the installation condition of outdoor unit?	• Wrong assembly • Installation condition is bad.
6	Check the BLDC Fan.	1) Is CN01 1, 3 over 250V? 2) Is CN01 3, 5 within 1V~5V? 3) Is the voltage of CN01 6 changed? 4) Is the resistance of BLDC Motor 1, 3 opened after power off?	• Outdoor PCB Error • BLDC Motor Error

12-4 Main Part Inspection Method

<table>
<tr><th>Part</th><th colspan="2">Breakdown Inspection Method</th></tr>
<tr><td rowspan="3">Room Temperature Sensor</td><td colspan="2">Measure resistance with a tester</td></tr>
<tr><td>Normal</td><td>At the normal temperature 37kΩ~ 8.3kΩ(-7˚C~+30˚C) *Refer to Table 12-3-4.</td></tr>
<tr><td>Abnormal</td><td>, 0Ω . . . Open or Short</td></tr>
<tr><td rowspan="3">Room Fan Motor</td><td colspan="2">Measure the resistance between terminals of the connector (CN72) with a tester.</td></tr>
<tr><td>Normal</td><td>At the normal temperature (10˚C ~ 30˚C)
<table>
<tr><th>Compare terminal</th><th>Resistance</th><th>Remark</th></tr>
<tr><td>Yellow, Blue</td><td>404.4Ω ± 10%</td><td>Main</td></tr>
<tr><td>Yellow, Red</td><td>340Ω ± 10%</td><td>Sub</td></tr>
</table></td></tr>
<tr><td>Abnormal</td><td>, 0Ω . . . Open or Short</td></tr>
<tr><td rowspan="3">Stepping Motor</td><td colspan="2">Measure the resistance between the red wire and each terminal wire with a tester.</td></tr>
<tr><td>Normal</td><td>About 300Ω at the normal temperature (20˚C ~ 30˚C)</td></tr>
<tr><td>Abnormal</td><td>, 0Ω . . . Open or Short</td></tr>
</table>

3. Alignment and Adjustments

3-1 Test Mode

■ How to Approach Test Mode

You can approach the Test Mode by pressing the on/off switch of indoor unit for 5 seconds.

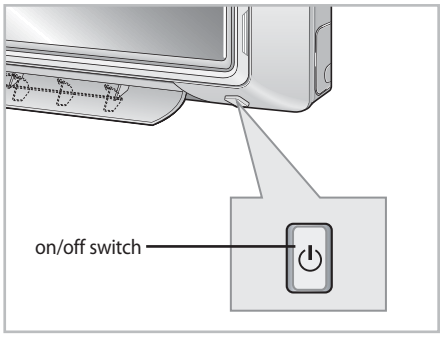

■ Test Mode Operation Option

After installing the air conditioner, check whether each subordinate is normally operated or not by operating the Test Mode.

- **When an error occurs, display the Error Mode.**
- **Operation Mode :** Cool mode. Operate the cool mode by operating the compressor by force without the compressor ON/OFF according to the set temperature/indoor temperature. (Do not follow the antifreeze control)
- **Up-down louver :** Up-down swing mode
- **Indoor Fan :** High

- Because the Test Mode operate the cool mode by force not related to the set temperature / indoor temperature, check whether each subordinate is operated normally or not after completing installation and must turn off the power of the air conditioner.

3-2-1 Indoor Display Error and Check Method

■ AQV09P*A/AQV12P*A

OPERATION	TIMER	GOOD SLEEP	DESCRIPTION
○	◎	○	Indoor Room Temp Sensor Error
◎	◎	○	Evap In Temp Sensor Error
○	○	◎	Fan Error (Indoor)
◎	◎	◎	EEPROM Error
◎	◎	◎	Option Error

■ AQV09PSB*/AQV12PSB*

OPERATION	TIMER	GOOD SLEEP	DESCRIPTION
○	◎	○	Indoor Room Temp Sensor Error
◎	◎	○	Evap In Temp Sensor Error
○	○	◎	Fan Error (Indoor)
◎	○	◎	Outdoor Error
○	◎	◎	Communication Error
◎	◎	◎	EEPROM Error
◎	◎	◎	Option Error

● LED ON
◎ LED BLINKING
○ LED OFF

3-2-2 Outdoor LED Display Error and Check Method

■ AQV**PWA

YEL	GRN	RED	DESCRIPTION
○	○	○	Power Off
◎	◎	◎	Reset
●	●	●	
○	◎	●	Normal Operation
○	○	●	Abnormal Communication
○	●	●	
○	○	◎	IPM Over Current(O.C)
○	◎	○	Comp Starting Error
○	◎	◎	Heatsink Sensor Error
			Heatsink Over Heat
○	●	◎	DC-Link Voltage Under/Over Error
			Over Voltage Protection Error
◎	○	●	OLP Over Heat
◎	◎	○	OLP Sensor Error
◎	◎	●	Current Sensor Error
			Input Current Sensor Error
◎	●	○	Comp Vlimit Error
			Comp Current Limit Error
◎	●	●	1min. Time Out Comm.
●	○	◎	OTP Error
●	○	●	Comp Wire Missing Error
●	◎	◎	DC-Link Voltage Sensor Error
●	◎	●	I-Trip Error
●	●	◎	AC Line Zero Cross Signal Out

■ AQV**PSB

YEL	GRN	RED	DESCRIPTION
○	○	○	Power off/VDD NG
○	○	◎	IPM Over Current(O.C)
○	○	●	Abnormal Serial Communication
○	●	●	(Indoor ↔ Outdoor)
○	◎	●	Normal Operation
○	◎	○	Comp Starting Error
○	●	◎	DC-Link Voltage Under/Over error / PFC Over Load/ H/W DC Link Over
◎	○	◎	Outdoor Temp Sensor Error
◎	○	●	Discharge Over Temperature
◎	◎	○	Discharge Temp Sensor Error
◎	◎	●	Current Sensor Error/ Heatsink Sensor/ Input Current Sensor
◎	●	○	Comp Vlimit Error/ Heatsink Over
◎	●	◎	Coil Temp Sensor Error
◎	●	●	1min. Time Out Communication (Inverter ↔ Main)
○	●	○	EEPROM Data Error
●	○	○	Fan Error
●	○	◎	OTP Error
●	○	●	Comp Rotation Error
●	◎	○	Operation Condition Secession
●	◎	◎	DC-Link Voltage Sensor Error
●	◎	●	I_Trip Error / PFC Over Current
●	●	○	GAS Leak Error(Dual/Single)
●	●	◎	AC Line Zero Cross Signal Out
●	●	●	Power ON Reset(1sec)
◎	○	○	Capacity Miss Match
○	◎	◎	Test Operation at Cooling Mode
◎	◎	◎	Test Operation at Heating Mode

● LED ON
◎ LED BLINKING
○ LED OFF

4. Troubleshooting

4-1 Setting Option Setup Method

ex) Option No. :

SEG1	SEG2	SEG3	SEG4	SEG5	SEG6	SEG7	SEG8	SEG9	SEG10	SEG11	SEG12	SEG13	SEG14	SEG15	SEG16	SEG17	SEG18	SEG19	SEG20	SEG21	SEG22	SEG23	SEG24
0	3	0	0	0	0	1	7	C	2	6	C	2	8	3	1	0	0	3	0	0	0	0	0

NOTE:
SEG1, SEG7, SEG13, SEG19 need not to be pressed in, so in fact the Option No. we should press in is as below.
30 00 07 C2 6C 83 10 00 00 00

Step 1 : Enter the Option Setup mode.

1st Take out the batteries of remote control.

2nd Press the temperature  button simultaneously and insert the battery again.

3rd Make sure the remote contr display shown as  .

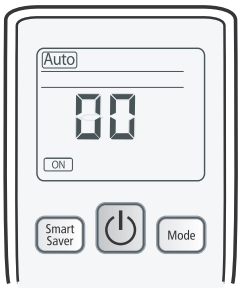

Step 2 : Enter the Option Setup mode and select your option according to the following procedure.

	Feature	Display
1	The default value is  . Every time you push the Mode button, the display panel reads ON Auto ➡ Cool ➡ Dry ➡ Fan ➡ Heat , OFF Auto ➡ Cool ➡ Dry ➡ Fan ➡ Heat repeatedly.	
2	Push the Fan button to set the display panel to 3 . Every time you push the Fan button, the display panel reads 0➡1➡2➡3➡ ..... ➡9➡A➡b➡c➡d➡E➡F repeatedly.	
3	Push the Mode button to  . Every time you push the Fan button, the display panel reads 0➡1➡2➡3➡ ..... ➡9➡A➡b➡c➡d➡E➡F repeatedly.	
4	Push the Mode button to  . Push the Fan button to set the display panel to 7. Every time you push the Fan button, the display panel reads 0➡1➡2➡3➡ ..... ➡9➡A➡b➡c➡d➡E➡F repeatedly.	
5	Push the Mode button to  . Push the Fan button to set the display panel to C . Every time you push the Fan button, the display panel reads 0➡1➡2➡3➡ ..... ➡9➡A➡b➡c➡d➡E➡F repeatedly.	
6	Push the Fan button to set the display panel to 2 . Every time you push the Fan button, the display panel reads 0➡1➡2➡3➡ ..... ➡9➡A➡b➡c➡d➡E➡F repeatedly.	

4-1 Setting Option Setup Method(continue)

	Feature	Display
7	Push the Mode button to 00. Push the Fan button to set the display panel to 6. Every time you push the Fan button, the display panel reads 0➡1➡2➡3➡ ..... ➡9➡A➡b➡c➡d➡E➡F repeatedly.	Heat 60 ON
8	Push the Fan button to set the display panel to 8. Every time you push the Fan button, the display panel reads 0➡1➡2➡3➡ ..... ➡9➡A➡b➡c➡d➡E➡F repeatedly.	Heat 6C ON
9	Push the Mode button to 00. Push the Fan button to set the display panel to 8. Every time you push the Fan button, the display panel reads 0➡1➡2➡3➡ ..... ➡9➡A➡b➡c➡d➡E➡F repeatedly.	Auto 80 OFF
10	Push the Fan button to set the display panel to 3. Every time you push the Fan button, the display panel reads 0➡1➡2➡3➡ ..... ➡9➡A➡b➡c➡d➡E➡F repeatedly.	Auto 83 OFF
11	Push the Mode button to 00. Push the Fan button to set the display panel to 1. Every time you push the Fan button, the display panel reads 0➡1➡2➡3➡ ..... ➡9➡A➡b➡c➡d➡E➡F repeatedly.	Cool 10 OFF
12	Push the Mode button to 00.	Dry 00 OFF
13	Push the Mode button to 00.	Fan 00 OFF
14	Push the Mode button to 00.	Heat 00 OFF

Step 3 : Upon completion of the selection, check you made right selections.

Press the Mode Selection key to set the display part and check the display part.

➡ The display part shows like below when each time you press Mode button .

Step 4 : Pressing the ON/OFF button ( )

When pressing the operation ON/OFF key with the direction of remote control for unit, the sound "Ding" or "Diriring" is heard and the OPERATION ICON( ) lamp of the display is flickering at the same time, then the input of option is completed. (If the diriring sound isn't heard, try again pressing the ON/OFF button.)

Step 4 : Pressing the ON/OFF button ( )

When pressing the operation ON/OFF key with the direction of remote control for unit, the sound "Ding" is heard and the OPERATION ICON( ) lamp of the display is flickering at the same time, then the input of option is completed. (If the diriring sound isn't heard, try again pressing the ON/OFF button.)

Step 5 : Unit operation test-run

First, Remove the battery from the remote control.

Second, Re-insert the battery into the remote control.

Third, Press ON/OFF key with the direction of remote control for set.

• Error Mode

1st If all lamps of indoor unit are flickering, Plug out, plug in power plug again and press ON/OFF key to retry.

2nd If the unit is not working properly or all lamps are continuously flickering after setting the option code, see if the correct option code is set up for its model.

■ OPTION ITEMS

MODE / REM0CON	SEG1	SEG2	SEG3	SEG4	SEG5	SEG6	SEG7	SEG8	SEG9	SEG10	SEG11	SEG12	SEG13	SEG14	SEG15	SEG16	SEG17	SEG18	SEG19	SEG20	SEG21	SEG22	SEG23	SEG24
AQV09P*A	0	0	8	0	2	1	1	1	5	2	0	C	2	8	1	0	0	0	3	0	0	0	0	0
AQV12P*A	0	0	7	0	2	2	1	7	5	2	4	D	2	8	1	8	0	0	3	0	0	0	0	0
AQV09PSB*	0	1	1	3	0	5	1	7	4	2	1	D	2	7	1	9	2	1	3	7	2	5	0	0
AQV12PSB*	0	1	1	3	0	5	1	7	4	2	3	D	2	7	2	3	2	8	3	7	2	5	0	0

13. Block Diagram

13-1 Indoor Unit

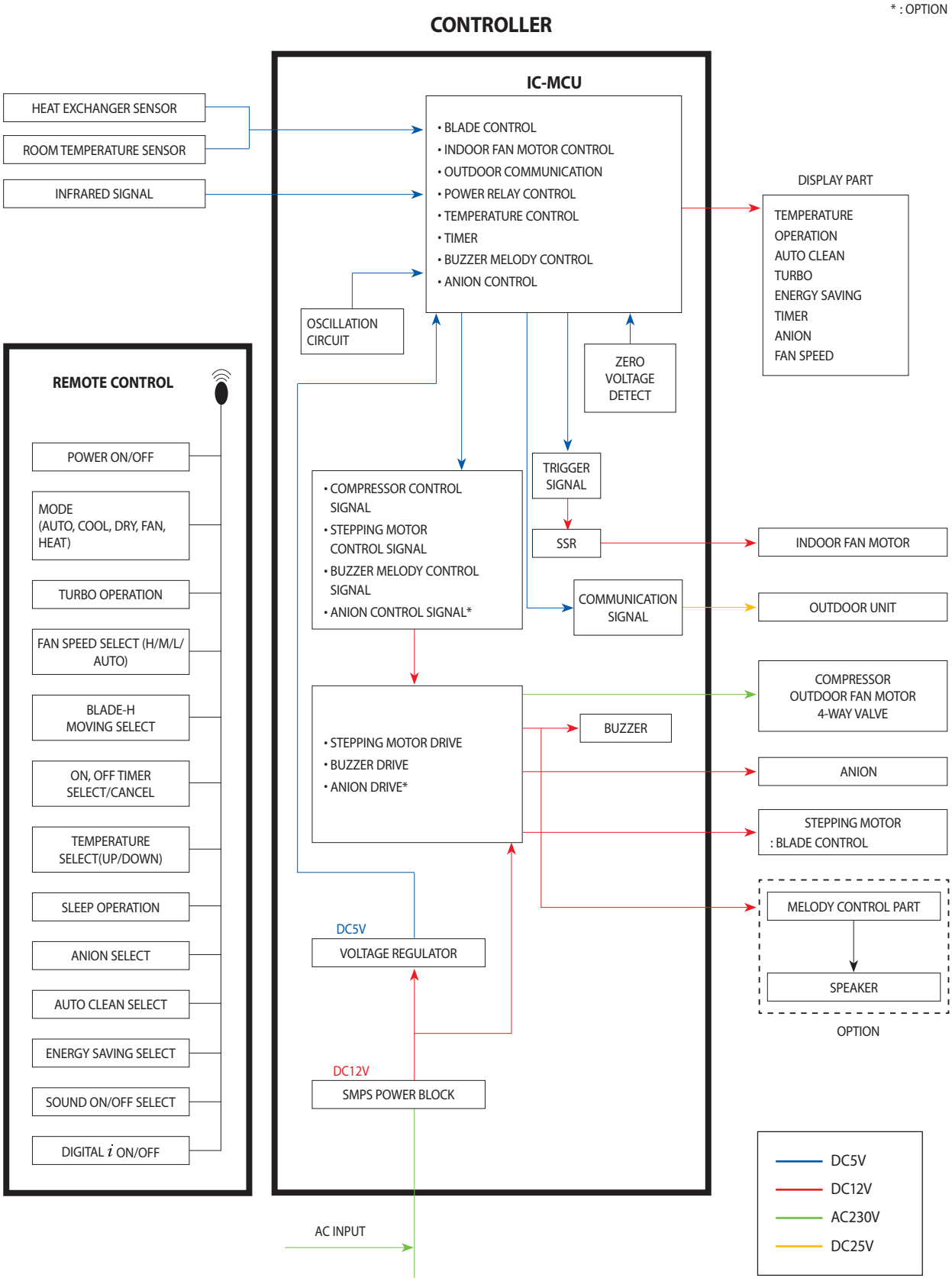

13-2 Outdoor Unit

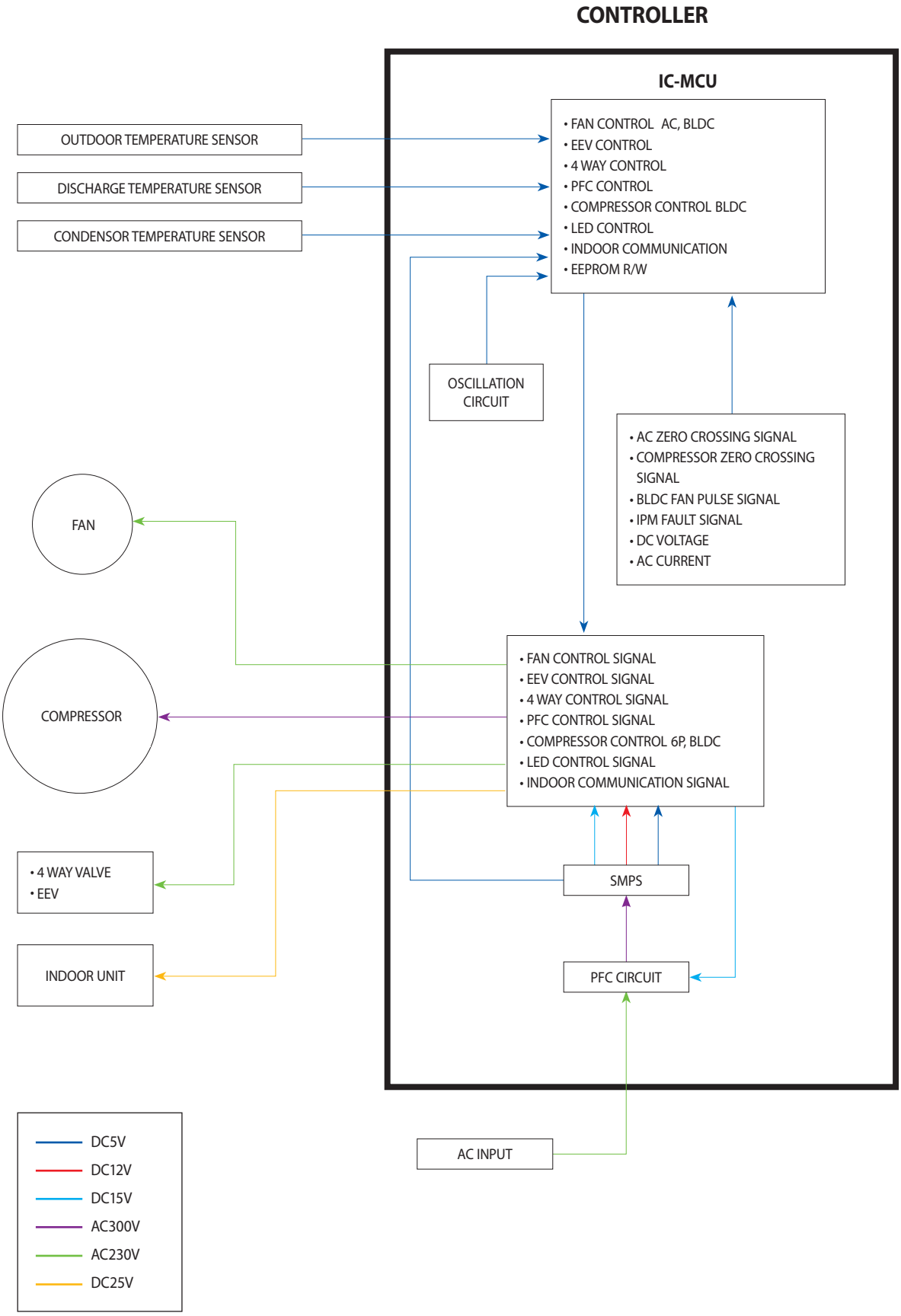

10. PCB Diagram

10-1 Indoor PCB

AQV**P*A

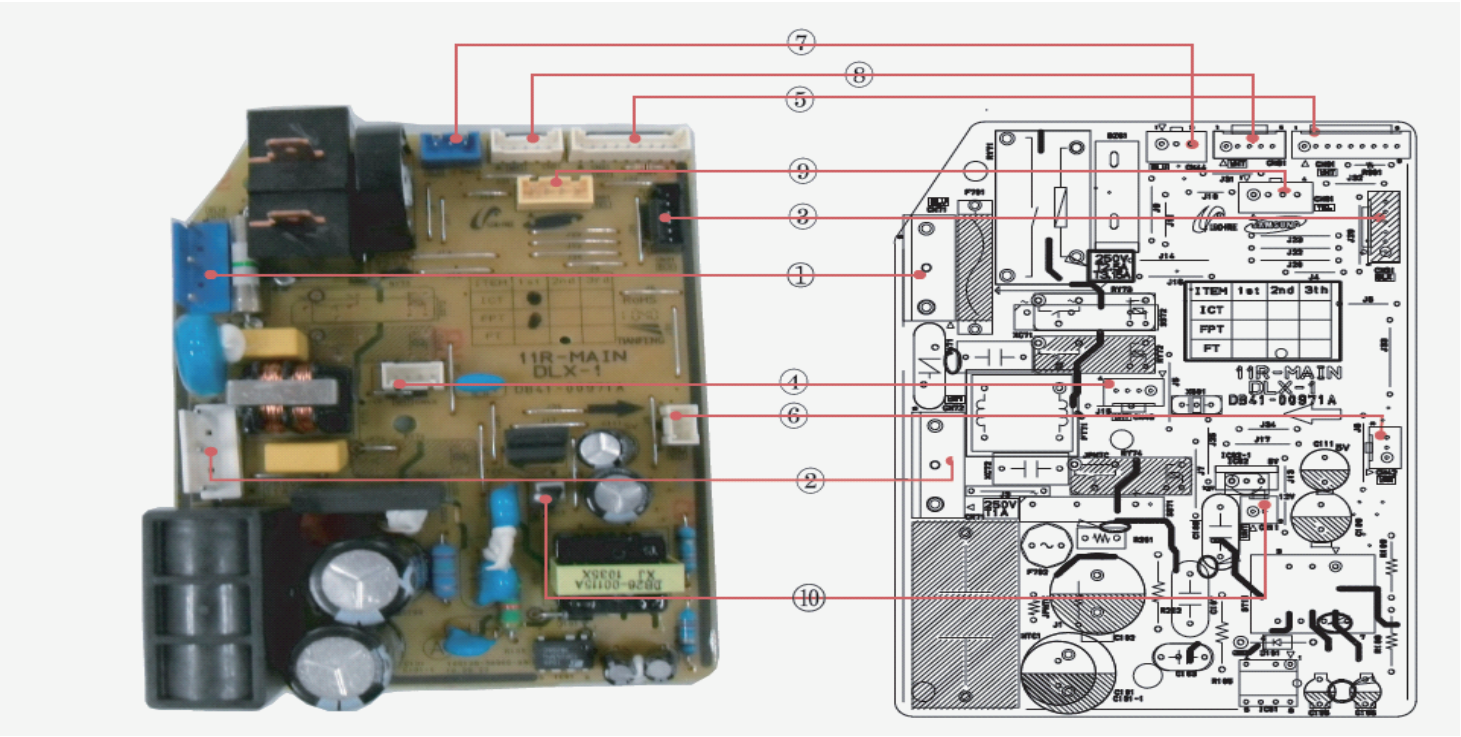

①CN71(L -terminal) Power Input #1:POWER #2:LOAD CONTROL signal #3:LOAD CONTROL signal	②CN72-FAN MOTOR #1:Motor start Capacitor connect #3:AC phase control sin-gal #5:Power	③CN31-DOWNLOAD #1:TEST #2:Vcc #3:GND #4:RESET #5:SDAT #6:SCLK	④CN43-TEMPERATURE SENSOR #1:Room temperature sensing #2:GND #3:Pipe temperature sensing #4:GND
⑤CN91-DISPLAY #1:DIO #2:CLK #3:STB #4:IRQ #5:GND #6:Vcc #7:Vovt #8:PWM_LED #9: ROOM-TEMP	⑥CN42-Humidity sensor #1:Output(P1) #2:Input #3:Output(P2)	⑦CN44-FAN MOTOR FEEDBACK #1:DC5V #2:GND #3:Feedback signal input	⑧CN61-STEP MOTOR #1:DC12V #2:Motor driving signal output_1 #3:Motor driving signal output_2 #4:Motor driving signal output_3 #5:Motor driving signal output_4
⑨CN81-SPI #1:MPI driving signal output (+) #3:DV12V	⑩CN11-12V CONNECT #1: SMPS Vovt(12V) #2:7805 INPUT(12V)		

10-1 Indoor PCB

AQV**PSB*

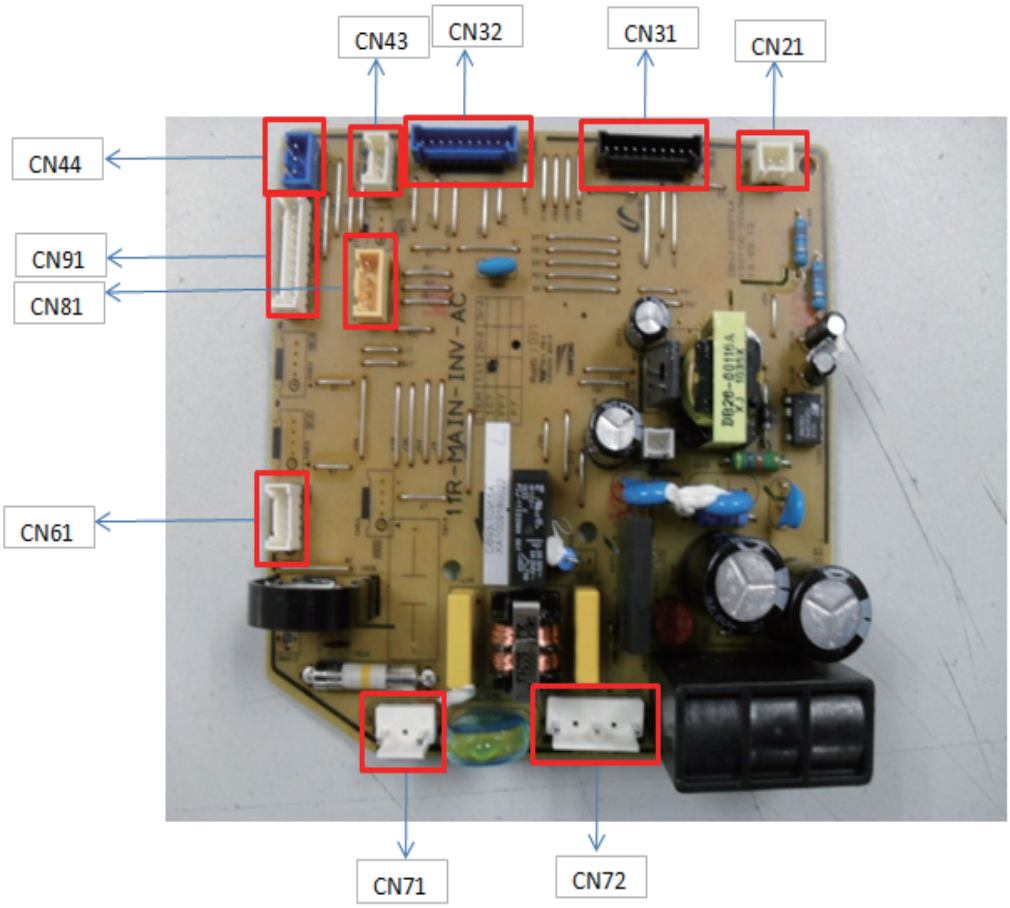

1. CN21-COMMUNICATION
2. CN31-DOWNLOAD
3. CN32-FJM
4. CN43-TEMPRATURE SENSOR
5. CN44-FAN MOTOR FEEDBACK
6. CN91-DISPLAY
7. CN81-MPI
8. CN61-STEP MOTOR
9. CN71-POWER IN
10. CN72-FAN MOTOR

10-2 Outdoor PCB

AQV**PSB*

⚠ The red number connecter is not used.

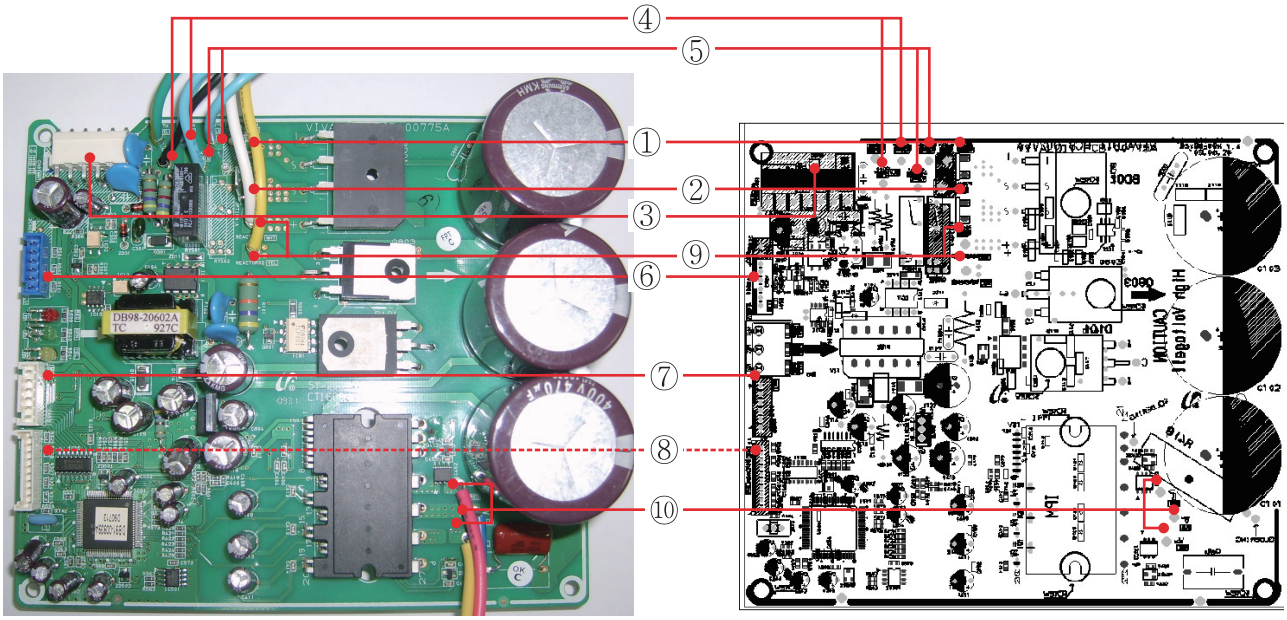

①Power N Wire	②Power L Wire	③CN01-BLCD FAN MOTOR #1: DC310V #2: Null #3: Motor Driving Signal #4:15V #5: Motor Driving Signal #6: Feedback Signal #7:Reverse Signal	④Communication AC Wire #Sky-blue #Black
⑤ 4Way-valve Wire	⑥ CN54-DIS/OUTDOOR/COND Temperature Sensor #1:Outdoor temperature sensing #2:GND #3:Discharge temperature-ture sensing #4:GND #5:Cond. temperature sensing #6:GND	⑦CN63-EEV Connector #1:EEV driving signal #2:EEV driving signal #3:EEV driving signal #4:EEV driving signal #5:EEV driving signal #6:DC 12V	⑧CN30-DOWMLOAD
⑨Reactor Connector Wire	⑩Compressor Wire		

10-2 Outdoor PCB

⚠ The red number connecter is not used.

AQV**P*A

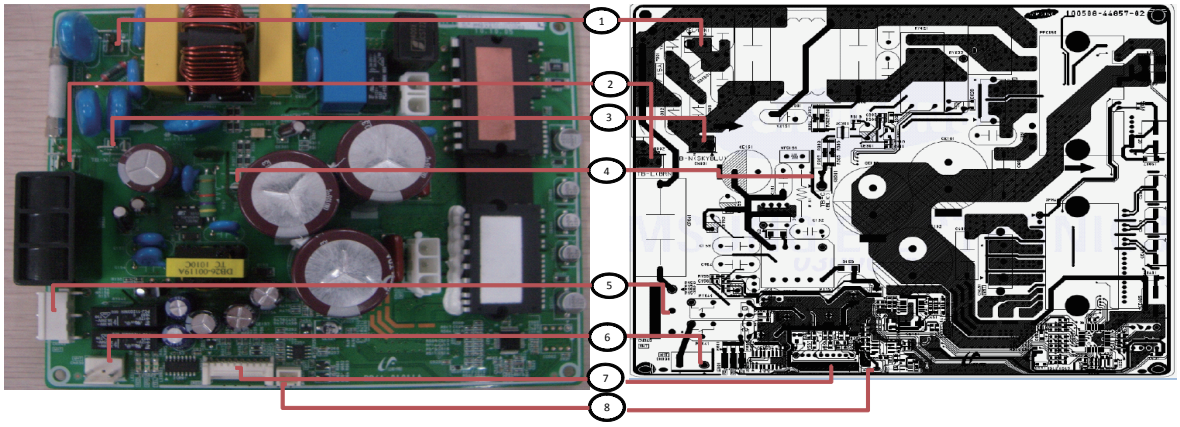

1. CN003-Earth Teminal
2. CN002-Power L Terminal
3. CN001-Power N Terminal
4. CN301-Control Terminal
5. CN040-Fan Connector
6. CN030-4Way Connector
7. CN551-Download Connector
8. CN251-SENSOR Connector
   #1 #2 : OLP SENSOR

7. Wiring Diagram

7-1 Indoor Unit

AQV**P*A

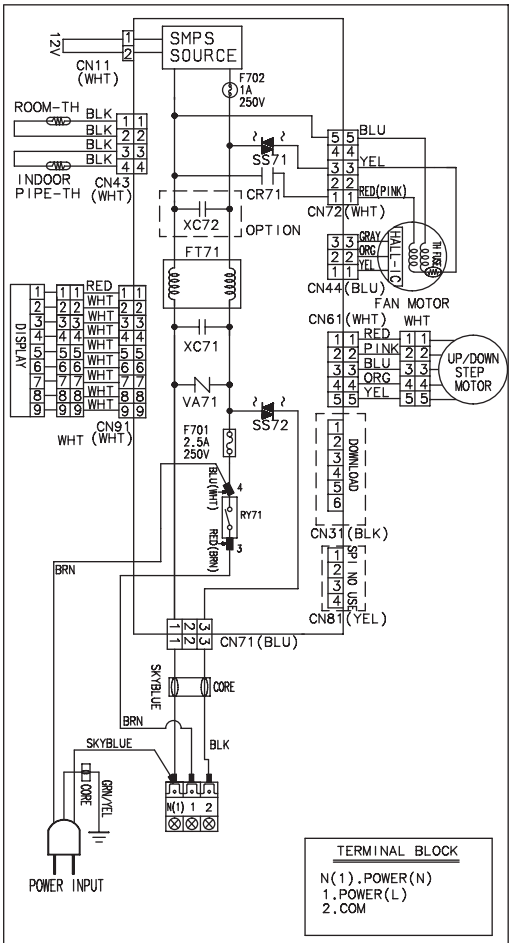

ERROR MODE			DESCRIPTION
AQV**P**			
Oper.	Timer	Good Sleep	
×	○	×	Indoor room temp sensor error
○	○	×	Evap in temp sensor error
×	×	○	Fan error(indoor)
○	×	○	Ourdoor error display
○	○	○	EEPROM error
○	○	○	Option error

● LED ON
○ LED BLINKING
× LED OFF

CODE NO:DB98-32799A INDOOR-UNIT

AQV**PSB*

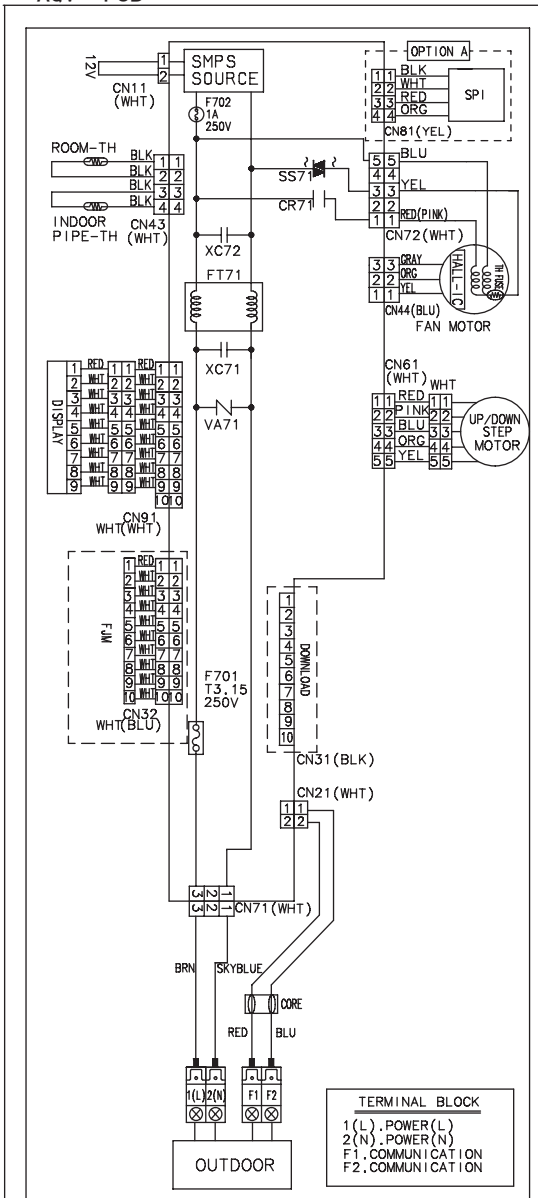

ERROR MODE			DESCRIPTION
AQV**P**			
Oper.	Timer	Good Sleep	
×	○	○	Communication error (indoor<->outdoor) Pre power relay error
×	○	×	Indoor room temp sensor error
○	○	×	Evap in temp sensor error
×	×	○	Fan error(indoor)
○	×	○	Ourdoor error display
○	○	○	EEPROM error
○	○	○	Option error

● LED ON
○ LED BLINKING
× LED OFF

OPTION	DESCRIPTION
OPTION A	SPI

CODE NO:DB98-32800A INDOOR-UNIT

This Document can not be used without Samsung's authorization.

AQV**P*A

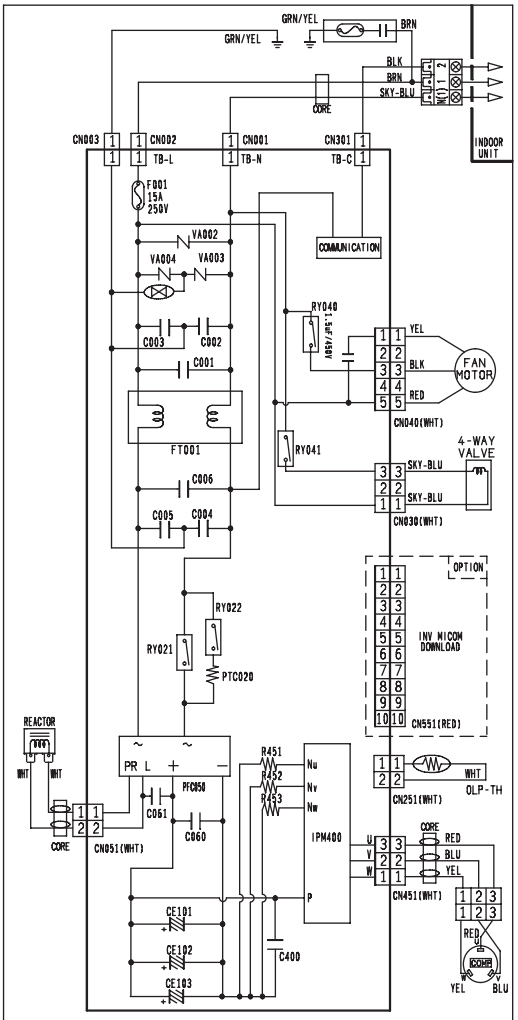

LED PATTERN YEL	GRN	RED	DESCRIPTION
○	○	○	Power off
◎	◎	◎	Reset
●	●	●	
○	◎	●	Normal Operation
○	○	●	Abnormal Communication
○	●	●	
○	○	◎	IPM Over Current(O.C)
○	◎	○	Comp Starting Error
○	◎	◎	Heatsink Sensor Error Heatsink Over Heat
○	●	◎	DC-Link Voltage Under/Over Error Over Voltage Protection Error
◎	○	●	OLP Over Heat
◎	◎	○	OLP Sensor Error
◎	◎	●	Current Sensor Error Input Current Sensor Error
◎	●	○	Comp Vlimit Error Comp Current Limit Error
◎	●	●	1min. Time out Comm. (Display Board : Onboard : Indoor <-> Outdoor)
●	○	◎	OTP Error
●	○	●	Comp Wire Missing Error
●	◎	◎	DC-Link Voltage Sensor Error
●	◎	●	I-Trip Error
●	●	◎	AC Line Zero Cross Signal Out

● LED ON
○ LED OFF
◎ LED BLINKING

DB98-32795A

AQV**PSB*

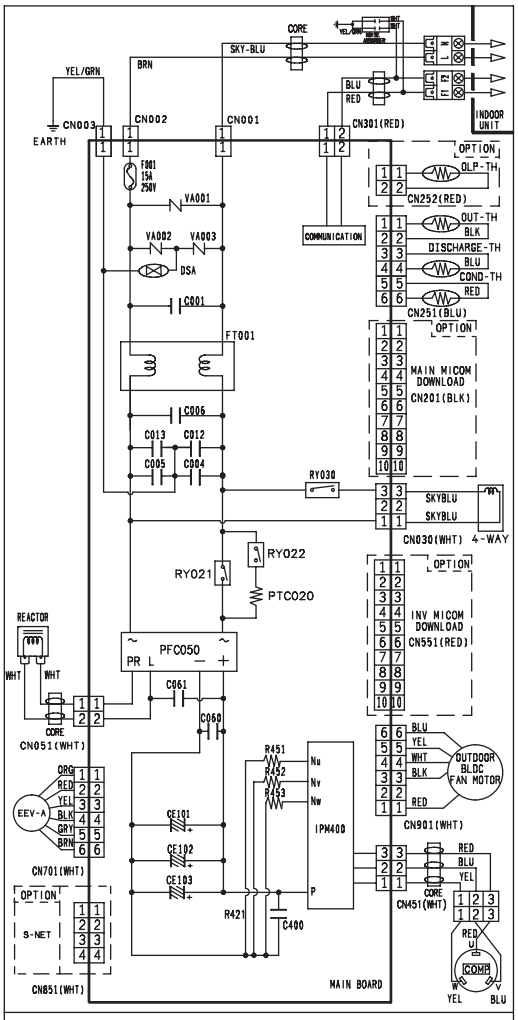

LED PATTERN YEL	GRN	RED	DESCRIPTION
○	○	○	Power Off / VDD NG
○	◎	●	Normal Operation
○	○	◎	IPM Over Current(O.C)
○	○	●	Abnormal Serial communication
○	●	●	(Display Board:Indoor<->Outdoor)
○	◎	○	Comp Starting error
○	●	◎	DC-Link voltage under/over error PFC over load / HW DC_link over
◎	○	◎	Outdoor temp sensor error(Dual/Single)
◎	○	●	Discharge over temperature(Dual/Single)
◎	◎	○	Discharge temp sensor error(Dual/Single)
◎	◎	●	Current sensor error/Heatsink sensor error Input current sensor error
◎	●	○	Comp Vlimit error/Heatsink over temp
◎	●	◎	Coil temp sensor error(Dual/Single)
◎	●	●	1min. Time out Comm. (Main <-> Inverter)
●	○	○	Fan error
○	●	○	EEProm data error
●	○	◎	OTP error
●	○	●	Comp rotation error
●	◎	○	Operation condition secession(Dual only)
●	◎	◎	DC-Link voltage sensor error
●	◎	●	I-Trip error / PFC Over current
●	●	○	GAS Leak error(Dual/Single)
●	●	◎	AC Line Zero Cross Signal out
●	●	●	Power ON reset(1sec)
◎	○	○	capacity miss match
○	◎	◎	Test Operation Cooling Mode
◎	◎	◎	Test Operation Heating Mode

● LED ON ○ LED OFF ◎ LED BLINKING

CODE NO:DB98-32796A OUTDOOR UNIT

This Document can not be used without Samsung's authorization.

6. Electrical Parts List

■ INDOOR MAIN PCB(AQV**P*A:DB93-10859G)

Parts Code	Location	Description	Specification	Q'TY
0402-000137	D101	DIODE-RECTIFIER	1N4007,1000V,1A,DO-41,TP	1
2001-000429	R901	R-CARBON	1Kohm,5%,1/8W,AA,TP,1.8x3.2mm	1
2002-001104	R108	R-COMPOSITION	12Mohm,5%,1/2W,AA,TP,3.4x9mm	1
2002-001104	R109	R-COMPOSITION	12Mohm,5%,1/2W,AA,TP,3.4x9mm	1
2401-000480	C106	C-AL	10uF,20%,50V,GP,TP,5x11,5	1
2401-000807	C111	C-AL	220uF,20%,16V,GP,TP,8x11.5,5	1
2401-002619	C105	C-AL	47uF,20%,25V,GP,TP,5x11,5	1
3812-001283	J10	WIRE-NO SHEATH CU	FE+CU+SN,300V,52mm(TAPING),1/0.6mm	1
3812-001283	J11	WIRE-NO SHEATH CU	FE+CU+SN,300V,52mm(TAPING),1/0.6mm	1
3812-001283	J13	WIRE-NO SHEATH CU	FE+CU+SN,300V,52mm(TAPING),1/0.6mm	1
3812-001283	J14	WIRE-NO SHEATH CU	FE+CU+SN,300V,52mm(TAPING),1/0.6mm	1
3812-001283	J15	WIRE-NO SHEATH CU	FE+CU+SN,300V,52mm(TAPING),1/0.6mm	1
3812-001283	J16	WIRE-NO SHEATH CU	FE+CU+SN,300V,52mm(TAPING),1/0.6mm	1
3812-001283	J17	WIRE-NO SHEATH CU	FE+CU+SN,300V,52mm(TAPING),1/0.6mm	1
3812-001283	J20	WIRE-NO SHEATH CU	FE+CU+SN,300V,52mm(TAPING),1/0.6mm	1
3812-001283	J22	WIRE-NO SHEATH CU	FE+CU+SN,300V,52mm(TAPING),1/0.6mm	1
3812-001283	J23	WIRE-NO SHEATH CU	FE+CU+SN,300V,52mm(TAPING),1/0.6mm	1
3812-001283	J25	WIRE-NO SHEATH CU	FE+CU+SN,300V,52mm(TAPING),1/0.6mm	1
3812-001283	J29	WIRE-NO SHEATH CU	FE+CU+SN,300V,52mm(TAPING),1/0.6mm	1
3812-001283	J3	WIRE-NO SHEATH CU	FE+CU+SN,300V,52mm(TAPING),1/0.6mm	1
3812-001283	J31	WIRE-NO SHEATH CU	FE+CU+SN,300V,52mm(TAPING),1/0.6mm	1
3812-001283	J32	WIRE-NO SHEATH CU	FE+CU+SN,300V,52mm(TAPING),1/0.6mm	1
3812-001283	J33	WIRE-NO SHEATH CU	FE+CU+SN,300V,52mm(TAPING),1/0.6mm	1
3812-001283	J34	WIRE-NO SHEATH CU	FE+CU+SN,300V,52mm(TAPING),1/0.6mm	1
3812-001283	J4	WIRE-NO SHEATH CU	FE+CU+SN,300V,52mm(TAPING),1/0.6mm	1
3812-001283	J5	WIRE-NO SHEATH CU	FE+CU+SN,300V,52mm(TAPING),1/0.6mm	1
3812-001283	J6	WIRE-NO SHEATH CU	FE+CU+SN,300V,52mm(TAPING),1/0.6mm	1
3812-001283	J7	WIRE-NO SHEATH CU	FE+CU+SN,300V,52mm(TAPING),1/0.6mm	1
3812-001283	J8	WIRE-NO SHEATH CU	FE+CU+SN,300V,52mm(TAPING),1/0.6mm	1
3812-001283	J9	WIRE-NO SHEATH CU	FE+CU+SN,300V,52mm(TAPING),1/0.6mm	1
3812-001283	JP RY74	WIRE-NO SHEATH CU	FE+CU+SN,300V,52mm(TAPING),1/0.6mm	1
3812-001283	JPNTC	WIRE-NO SHEATH CU	FE+CU+SN,300V,52mm(TAPING),1/0.6mm	1
6042-000001	E703	EYELET	ID2.2,OD2.7,L3.1,NI+SN,BSP3-1/2H	1
6042-000001	E704	EYELET	ID2.2,OD2.7,L3.1,NI+SN,BSP3-1/2H	1
6042-000001	E705	EYELET	ID2.2,OD2.7,L3.1,NI+SN,BSP3-1/2H	1
6042-000001	E706	EYELET	ID2.2,OD2.7,L3.1,NI+SN,BSP3-1/2H	1
6042-000001	E707	EYELET	ID2.2,OD2.7,L3.1,NI+SN,BSP3-1/2H	1
6042-000001	E708	EYELET	ID2.2,OD2.7,L3.1,NI+SN,BSP3-1/2H	1
6042-000001	E711	EYELET	ID2.2,OD2.7,L3.1,NI+SN,BSP3-1/2H	1
6042-000001	E712	EYELET	ID2.2,OD2.7,L3.1,NI+SN,BSP3-1/2H	1
6042-000002	E101	EYELET	ID1.5,OD2,L2.8,NI+SN,BSP3-1/2H	1
6042-000002	E102	EYELET	ID1.5,OD2,L2.8,NI+SN,BSP3-1/2H	1
6042-000002	E103	EYELET	ID1.5,OD2,L2.8,NI+SN,BSP3-1/2H	1
6042-000002	E104	EYELET	ID1.5,OD2,L2.8,NI+SN,BSP3-1/2H	1

6042-000002	E701	EYELET	ID1.5,OD2,L2.8,NI+SN,BSP3-1/2H	1
6042-000002	E702	EYELET	ID1.5,OD2,L2.8,NI+SN,BSP3-1/2H	1
6042-000002	E709	EYELET	ID1.5,OD2,L2.8,NI+SN,BSP3-1/2H	1
6042-000002	E710	EYELET	ID1.5,OD2,L2.8,NI+SN,BSP3-1/2H	1
DB41-00971A	PCB	PCB MAIN-IN	11R_RAC_STD_AC,FR-1,1,T1.6,90*120,2	1
0402-001192	D103	DIODE-RECTIFIER	ES2D,200V,2A,SMB,TP	1
0402-001298	BD71	DIODE-BRIDGE	DF06S,600V,1A,SMD-4,TP	1
0402-001427	D102	DIODE-RECTIFIER	ES1D,200V,1A,DO-214AC,TP	1
0403-000258	ZD02	DIODE-ZENER	BZX84C5V6,5.2-6V,225mW,SOT-23,TP	1
0403-001285	ZD01	DIODE-ZENER	BZX84-C11,10.4-11.6V,350mW,SOT-23,TP	1
0501-000534	Q401	TR-SMALL SIGNAL	2SC2412K,NPN,200mW,SOT-23,TP,180-390	1
0501-000534	Q601	TR-SMALL SIGNAL	2SC2412K,NPN,200mW,SOT-23,TP,180-390	1
0504-001064	Q101	TR-DIGITAL	DTC114EKA,NPN,200mW,10K/10K,SOT-23,TP	1
0504-001064	Q602	TR-DIGITAL	DTC114EKA,NPN,200mW,10K/10K,SOT-23,TP	1
0506-000175	IC05	TR-ARRAY	2003,NPN,7,1W,SOP-16,ST,1000	1
0604-001002	PC01	PHOTO-COUPLER	TR,100-600%,200mW,SOP-4,TP	1
0604-001172	PC02	PHOTO-COUPLER	TR,150-300,200mW,SOP,TP	1
1103-001431	IC03	IC-EEPROM	AT24C08BN,8Kbit,1Kx8,SOP,8P,4.9x3.9mm,1.8/5.5,-40to+85C,18uA,TP	1
1203-006245	IC06	IC-VOL. DETECTOR	KIA7033AT,TSM,3P,2.9x1.6x0.7mm,PLASTIC,3.3V,350mW,-30to+85C,TP	1
2007-000033	J12	R-CHIP	0ohm,5%,1/4W,TP,3216	1
2007-000033	J18	R-CHIP	0ohm,5%,1/4W,TP,3216	1
2007-000033	J19	R-CHIP	0ohm,5%,1/4W,TP,3216	1
2007-000033	J2	R-CHIP	0ohm,5%,1/4W,TP,3216	1
2007-000033	J21	R-CHIP	0ohm,5%,1/4W,TP,3216	1
2007-000033	J24	R-CHIP	0ohm,5%,1/4W,TP,3216	1
2007-000033	J26	R-CHIP	0ohm,5%,1/4W,TP,3216	1
2007-000033	J27	R-CHIP	0ohm,5%,1/4W,TP,3216	1
2007-000033	J28	R-CHIP	0ohm,5%,1/4W,TP,3216	1
2007-000033	J30	R-CHIP	0ohm,5%,1/4W,TP,3216	1
2007-000074	R110	R-CHIP	100ohm,5%,1/10W,TP,1608	1
2007-000076	R403	R-CHIP	330ohm,5%,1/10W,TP,1608	1
2007-000076	R404	R-CHIP	330ohm,5%,1/10W,TP,1608	1
2007-000076	R601	R-CHIP	330ohm,5%,1/10W,TP,1608	1
2007-000076	R602	R-CHIP	330ohm,5%,1/10W,TP,1608	1
2007-000077	R112	R-CHIP	470ohm,5%,1/10W,TP,1608	1
2007-000078	R206	R-CHIP	1Kohm,5%,1/10W,TP,1608	1
2007-000078	R303	R-CHIP	1Kohm,5%,1/10W,TP,1608	1
2007-000078	R304	R-CHIP	1Kohm,5%,1/10W,TP,1608	1
2007-000078	R405	R-CHIP	1Kohm,5%,1/10W,TP,1608	1
2007-000078	R407	R-CHIP	1Kohm,5%,1/10W,TP,1608	1
2007-000081	R111	R-CHIP	2.7Kohm,5%,1/10W,TP,1608	1
2007-000084	R205	R-CHIP	4.7Kohm,5%,1/10W,TP,1608	1
2007-000084	R301	R-CHIP	4.7Kohm,5%,1/10W,TP,1608	1
2007-000084	R302	R-CHIP	4.7Kohm,5%,1/10W,TP,1608	1
2007-000084	R502	R-CHIP	4.7Kohm,5%,1/10W,TP,1608	1
2007-000084	R503	R-CHIP	4.7Kohm,5%,1/10W,TP,1608	1
2007-000084	R504	R-CHIP	4.7Kohm,5%,1/10W,TP,1608	1
2007-000087	R406	R-CHIP	6.8Kohm,5%,1/10W,TP,1608	1
2007-000090	R306	R-CHIP	10Kohm,5%,1/10W,TP,1608	1
2007-000097	R902	R-CHIP	47Kohm,5%,1/10W,TP,1608	1

2007-000109	R501	R-CHIP	1Mohm,5%,1/10W,TP,1608	1
2007-000481	R101	R-CHIP	1Mohm,5%,1/4W,TP,3216	1
2007-000481	R102	R-CHIP	1Mohm,5%,1/4W,TP,3216	1
2007-000481	R103	R-CHIP	1Mohm,5%,1/4W,TP,3216	1
2007-000781	R106	R-CHIP	33ohm,5%,1/8W,TP,2012	1
2007-001068	R401	R-CHIP	6.8Kohm,1%,1/10W,TP,1608	1
2007-001068	R402	R-CHIP	6.8Kohm,1%,1/10W,TP,1608	1
2007-001074	R107	R-CHIP	6.8ohm,5%,1/8W,TP,2012	1
2007-001318	R305	R-CHIP	1Kohm,5%,1/4W,TP,3216	1
2007-007385	R113	R-CHIP	1.2Mohm,1%,1/4w,TP,3216	1
2203-000257	C403	C-CER,CHIP	10nF,10%,50V,X7R,TP,1608	1
2203-000257	C501	C-CER,CHIP	10nF,10%,50V,X7R,TP,1608	1
2203-000440	C901	C-CER,CHIP	1nF,10%,50V,X7R,TP,1608	1
2203-005249	C104	C-CER,CHIP	100nF,10%,50V,X7R,TP,1608	1
2203-005249	C110	C-CER,CHIP	100nF,10%,50V,X7R,TP,1608	1
2203-005249	C112	C-CER,CHIP	100nF,10%,50V,X7R,TP,1608	1
2203-005249	C113	C-CER,CHIP	100nF,10%,50V,X7R,TP,1608	1
2203-005249	C201	C-CER,CHIP	100nF,10%,50V,X7R,TP,1608	1
2203-005249	C301	C-CER,CHIP	100nF,10%,50V,X7R,TP,1608	1
2203-005249	C302	C-CER,CHIP	100nF,10%,50V,X7R,TP,1608	1
2203-005249	C303	C-CER,CHIP	100nF,10%,50V,X7R,TP,1608	1
2203-005249	C401	C-CER,CHIP	100nF,10%,50V,X7R,TP,1608	1
2203-005249	C402	C-CER,CHIP	100nF,10%,50V,X7R,TP,1608	1
2203-005249	C404	C-CER,CHIP	100nF,10%,50V,X7R,TP,1608	1
2203-005249	C502	C-CER,CHIP	100nF,10%,50V,X7R,TP,1608	1
2203-005249	C503	C-CER,CHIP	100nF,10%,50V,X7R,TP,1608	1
2203-005249	C504	C-CER,CHIP	100nF,10%,50V,X7R,TP,1608	1
DB91-01168A	IC04	ASSY-MIC	Maldive Low Cost Inv,STM-1035-OA, S3C84VBXZZ-QT8B, 64QFP, ROM 64KB	1
DB09-00588A	-	IC MICOM	S3F84VBXZZ-QT8B,64QFP,DC5V,12MHz,QFP,8BIT,8BIT,QFP,QFP,8BIT,-40~+85,64Kbyte	1
1203-000274	IC02	IC-POSI.FIXED REG.	7805,TO-220,3P,-,PLASTIC,4.8/5	1
1203-006089	IC01	IC-PWM CONTROLLER	TOP253PN,DIP,7P,6.35x9.57mm,PLASTIC,-0.3V/700V,15W,-40Cto+150C,1.37A,ST	1
1405-000160	VA71	VARISTOR	680V,4500A,17.5x6.5mm,TP	1
2003-000598	R202	R-METAL OXIDE(S)	24Kohm,5%,2W,AA,TP,4.3x12mm	1
2003-000706	R105	R-METAL OXIDE(S)	47Kohm,5%,2W,AA,TP,4.3x12mm	1
2003-002409	R201	R-METAL OXIDE(S)	24Kohm,5%,2W,AF,TP,4x11mm	1
2201-000983	C103	C-CERAMIC,DISC	1nF,10%,2000V,Y5P,BK,9x5mm,7.5mm	1
2201-000987	C107	C-CERAMIC,DISC	2.2nF,20%,400V,Y5U,TP,12.5x6mm,10mm	1
2201-000987	C108	C-CERAMIC,DISC	2.2nF,20%,400V,Y5U,TP,12.5x6mm,10mm	1
2301-001915	CR71	C-FILM,LEAD	1200nF,+10-5%,450V,BK,37x18x30mm	1
2301-002032	XC71	C-FILM,LEAD-PPF	100nF,10%,275V,TP,12.5X6X12.0	1
2301-002032	XC72	C-FILM,LEAD-PPF	100nF,10%,275V,TP,12.5X6X12.0	1
2401-001998	C109	C-AL	1000uF,20%,25V,GP,TP,10x20,5mm	1
2401-003763	C101	C-AL	33uF,20%,450V,GP,TP,16x31.5mm,5mm	1
2401-003763	C102	C-AL	33uF,20%,450V,GP,TP,16x31.5mm,5mm	1
2802-001198	X501	RESONATOR-CERAMIC	10MHz,0.5%,BK,8x3x5.5mm	1

3002-001129	BZ61	BUZZER-PIEZO	85dB,2KHz,BK	1
3501-001268	RY71	RELAY-POWER	12V,0.9W,25000mA,1FormA,20ms,10ms	1
3502-000115	SS71	SSR	12V,2A,1ms,1ms	1
3502-000115	SS72	SSR	12V,2A,1ms,1ms	1
3601-001209	F702	FUSE-RADIAL LEAD	250V,1A,TIME-LAG,-,8.5x8mm	1
3601-001288	F701	FUSE-AXIAL LEAD	250V,2.5A,TIME-LAG,CERAMIC-TUBE,5.2x20mm	1
3711-000260	CN71	HEADER-BOARD TO CABLE	1WALL,3P,1R,7.92mm,STRAIGHT,SN,BLU	1
3711-000262	CN72	HEADER-BOARD TO CABLE	1WALL,3P,1R,7.92MM,STRAIGHT,SN,WHT	1
3711-000879	CN44	HEADER-BOARD TO CABLE	BOX,3P,1R,2.5mm,STRAIGHT,SN,BLU	1
3711-000941	CN81	HEADER-BOARD TO CABLE	BOX,4P,1R,2.5mm,STRAIGHT,SN,YEL	1
3711-004379	CN43	HEADER-BOARD TO CABLE	BOX,4P,1R,2mm,STRAIGHT,SN,WHT	1
3711-004484	CN61	HEADER-BOARD TO CABLE	BOX,5P,1R,2mm,STRAIGHT,SN,WHT	1
3711-004712	CN91	HEADER-BOARD TO CABLE	BOX,9P,1R,2mm,STRAIGHT,SN,WHT	1
3711-007067	CN31	HEADER-BOARD TO CABLE	BOX,6P,1R,2mm,STRAIGHT,SN,BLK	1
DB26-00115A	ST11	TRANS SWITCHING	DB26-00115A,TOP253PN,PL-7,PM-7,DMR40,EE1916,50/60Hz,620uH	1
DB27-00017A	FT71	COIL CHOKE	USAV-07153,UU1116,15.0mH,+50~-30%,1.3ohm,15mH,105,20*18mm,13,0.6,BK,-25℃~+85℃	1
DB67-00942A	VA71-CAP	CAP	VIVALDI-P/J,SHP2,-,-,-,GREEN,SSEC	1
DB93-10917A	CN11	ASSY CONNECTOR WIRE-PCB	FORTE 1,AWG#28	1

■ INDOOR MAIN PCB(AQV**PSB*:DB93-10955A)

Parts Code	Locatio	Description	Specification	Q'TY
0402-001227	BD71	DIODE-BRIDGE	D3SBA60,600V,2.3A,SIP-4,BK	1
1203-000274	IC02	IC-POSI.FIXED REG.	7805,TO-220,3P,-,PLASTIC,4.8/5	1
1203-001238	IC09	IC-POSI.ADJUST REG.	78L15,TO-92,3P,-,PLASTIC,14.4/	1
1203-006089	IC01	IC-PWM CONTROLLER	TOP253PN,DIP,7P,6.35x9.57mm,PLASTIC,-0.3V/700V,15W,-40Cto+150C,1.37A,ST	1
1404-001274	NTC1	THERMISTOR-NTC	22ohm,1.4A,3100K,9.5mW/C,-,7.0,-	1
1405-000160	VA71	VARISTOR	680V,4500A,17.5x6.5mm,TP	1
2301-001220	XC71	C-FILM,LEAD-PPF	100nF,10%,275V,BK,18x6x12mm	1
2301-001220	XC72	C-FILM,LEAD-PPF	100nF,10%,275V,BK,18x6x12mm	1
2401-004393	C101	C-AL	100uF,20%,500V,-,BK,25.4x30mm,10mm	1
3002-001129	BZ61	BUZZER-PIEZO	85dB,2KHz,BK	1
3501-001154	RY74	RELAY-MINIATURE	12V,200mW,3000mA,1FormA,10ms,10ms	1
3601-001336	F701	FUSE-AXIAL LEAD	250V,3.15A,TIME-LAG,CERAMIC,5.2x20mm	1
3711-000015	CN21	HEADER-BOARD TO CABLE	BOX,2P,1R,2.5MM,STRAIGHT,SN,WHT	1
3711-000203	CN71	HEADER-BOARD TO CABLE	1WALL,2P/3P,1R,7.92mm,STRAIGHT,SN,WHT	1
3711-000296	CN72	HEADER-BOARD TO CABLE	1WALL,6P,1R,3.96MM,STRAIGHT,SN,WHT	1
3711-000941	CN81	HEADER-BOARD TO CABLE	BOX,4P,1R,2.5mm,STRAIGHT,SN,YEL	1
3711-004182	CN91	HEADER-BOARD TO CABLE	BOX,10P,1R,2MM,STRAIGHT,SN,NTR	1
3711-004379	CN43	HEADER-BOARD TO CABLE	BOX,4P,1R,2mm,STRAIGHT,SN,WHT	1
3711-004484	CN61	HEADER-BOARD TO CABLE	BOX,5P,1R,2mm,STRAIGHT,SN,WHT	1
3711-005716	CN31	HEADER-BOARD TO CABLE	BOX,10P,1R,2mm,STRAIGHT,SN,BLK	1
3711-006678	CN32	HEADER-BOARD TO CABLE	BOX,10P,1R,2mm,STRAIGHT,SN,BLU	1
DB26-00116A	ST11	TRANS SWITCHING	DB26-00116A,TOP253PN,PL-7,PM-7,DMR40,EE2218,50/60Hz,1.2mH	1
DB27-00017A	FT71	COIL CHOKE	USAV-07153,UU1116,15.0mH,+50~-30%,1.3ohm,15mH,105,20*18mm,13,0.6,BK,-25℃~+85℃	1
DB67-00942A	VA71_1	CAP	VIVALDI-P/J,SHP2,-,-,-,GREEN,SSEC	1
DB68-02809A	LABEL	LABEL BAR CODE	45,15,E-PASS	1
DB93-10917A	CN11	ASSY CONNECTOR WIRE-PCB	FORTE 1,AWG#28	1
DB93-11027A	CN73	ASSY PCB SUB-HVPS	BORACAY,SSEC,N	1
3711-005658	CN72	CONNECTOR-HEADER	NOWALL,4P,1R,2mm,ANGLE,SN,WHT	1
0501-000534	Q702	TR-SMALL SIGNAL	2SC2412K,NPN,200mW,SOT-23,TP,180-390	1
1202-000104	IC11	IC-VOLTAGE COMP.	393,SOP,8P,150MIL,DUAL,36V,CMOS,PLASTIC,18V,780mW,0to+70C,18V,5mV,250nA,50NA,30	1
2007-000052	R710	R-CHIP	10Kohm,1%,1/10W,TP,1608	1
2007-000067	R713	R-CHIP	15Kohm,1%,1/10W,TP,1608	1
2007-000130	R715	R-CHIP	39Kohm,5%,1/10W,TP,1608	1
2007-000475	R709	R-CHIP	1Mohm,1%,1/10W,TP,1608	1
2007-000772	R712	R-CHIP	33Kohm,1%,1/10W,TP,1608	1
2007-001096	R714	R-CHIP	62Kohm,1%,1/10W,TP,1608	1
2007-001206	R711	R-CHIP	82Kohm,1%,1/10W,TP,1608	1
2203-000440	C709	C-CER,CHIP	1nF,10%,50V,X7R,TP,1608	1
2203-000440	C711	C-CER,CHIP	1nF,10%,50V,X7R,TP,1608	1
2203-005249	C710	C-CER,CHIP	100nF,10%,50V,X7R,TP,1608	1
2203-005249	C712	C-CER,CHIP	100nF,10%,50V,X7R,TP,1608	1
DB41-01021A	PCB	PCB SUB-HVPS	FR-1,T1.6	1
0402-000137	D101	DIODE-RECTIFIER	1N4007,1000V,1A,DO-41,TP	1
0402-000137	D701	DIODE-RECTIFIER	1N4007,1000V,1A,DO-41,TP	1
2002-001104	R108	R-COMPOSITION	12Mohm,5%,1/2W,AA,TP,3.4x9mm	1

2002-001104	R109	R-COMPOSITION	12Mohm,5%,1/2W,AA,TP,3.4x9mm	1
2003-000706	R105	R-METAL OXIDE(S)	47Kohm,5%,2W,AA,TP,4.3x12mm	1
2003-002409	R201	R-METAL OXIDE(S)	24Kohm,5%,2W,AF,TP,4x11mm	1
2003-002409	R202	R-METAL OXIDE(S)	24Kohm,5%,2W,AF,TP,4x11mm	1
2201-000983	C103	C-CERAMIC,DISC	1nF,10%,2000V,Y5P,BK,9x5mm,7.5mm	1
2201-000987	C107	C-CERAMIC,DISC	2.2nF,20%,400V,Y5U,TP,12.5x6mm,10mm	1
2201-000987	C108	C-CERAMIC,DISC	2.2nF,20%,400V,Y5U,TP,12.5x6mm,10mm	1
2401-000027	C706	C-AL	4.7uF,20%,50V,GP,TP,5x11,5	1
2401-000480	C106	C-AL	10uF,20%,50V,GP,TP,5x11,5	1
2401-000807	C111	C-AL	220uF,20%,16V,GP,TP,8x11.5,5	1
2401-001998	C109	C-AL	1000uF,20%,25V,GP,TP,10x20,5mm	1
2401-002300	C701	C-AL	47uF,20%,50V,GP,TP,6.3x11,5mm	1
2401-002300	C703	C-AL	47uF,20%,50V,GP,TP,6.3x11,5mm	1
2401-002619	C105	C-AL	47uF,20%,25V,GP,TP,5x11,5	1
2802-001179	X901	RESONATOR-CERAMIC	4MHZ,0.5%,BK,8X3X5.5MM	1
3601-001209	F702	FUSE-RADIAL LEAD	250V,1A,TIME-LAG,-,8.5x8mm	1
3812-001283	J10	WIRE-NO SHEATH CU	FE+CU+SN,300V,52mm(TAPING),1/0.6mm	1
3812-001283	J11	WIRE-NO SHEATH CU	FE+CU+SN,300V,52mm(TAPING),1/0.6mm	1
3812-001283	J12	WIRE-NO SHEATH CU	FE+CU+SN,300V,52mm(TAPING),1/0.6mm	1
3812-001283	J13	WIRE-NO SHEATH CU	FE+CU+SN,300V,52mm(TAPING),1/0.6mm	1
3812-001283	J14	WIRE-NO SHEATH CU	FE+CU+SN,300V,52mm(TAPING),1/0.6mm	1
3812-001283	J15	WIRE-NO SHEATH CU	FE+CU+SN,300V,52mm(TAPING),1/0.6mm	1
3812-001283	J16	WIRE-NO SHEATH CU	FE+CU+SN,300V,52mm(TAPING),1/0.6mm	1
3812-001283	J17	WIRE-NO SHEATH CU	FE+CU+SN,300V,52mm(TAPING),1/0.6mm	1
3812-001283	J18	WIRE-NO SHEATH CU	FE+CU+SN,300V,52mm(TAPING),1/0.6mm	1
3812-001283	J19	WIRE-NO SHEATH CU	FE+CU+SN,300V,52mm(TAPING),1/0.6mm	1
3812-001283	J2	WIRE-NO SHEATH CU	FE+CU+SN,300V,52mm(TAPING),1/0.6mm	1
3812-001283	J20	WIRE-NO SHEATH CU	FE+CU+SN,300V,52mm(TAPING),1/0.6mm	1
3812-001283	J21	WIRE-NO SHEATH CU	FE+CU+SN,300V,52mm(TAPING),1/0.6mm	1
3812-001283	J22	WIRE-NO SHEATH CU	FE+CU+SN,300V,52mm(TAPING),1/0.6mm	1
3812-001283	J23	WIRE-NO SHEATH CU	FE+CU+SN,300V,52mm(TAPING),1/0.6mm	1
3812-001283	J24	WIRE-NO SHEATH CU	FE+CU+SN,300V,52mm(TAPING),1/0.6mm	1
3812-001283	J25	WIRE-NO SHEATH CU	FE+CU+SN,300V,52mm(TAPING),1/0.6mm	1
3812-001283	J26	WIRE-NO SHEATH CU	FE+CU+SN,300V,52mm(TAPING),1/0.6mm	1
3812-001283	J28	WIRE-NO SHEATH CU	FE+CU+SN,300V,52mm(TAPING),1/0.6mm	1
3812-001283	J29	WIRE-NO SHEATH CU	FE+CU+SN,300V,52mm(TAPING),1/0.6mm	1
3812-001283	J3	WIRE-NO SHEATH CU	FE+CU+SN,300V,52mm(TAPING),1/0.6mm	1
3812-001283	J30	WIRE-NO SHEATH CU	FE+CU+SN,300V,52mm(TAPING),1/0.6mm	1
3812-001283	J31	WIRE-NO SHEATH CU	FE+CU+SN,300V,52mm(TAPING),1/0.6mm	1
3812-001283	J32	WIRE-NO SHEATH CU	FE+CU+SN,300V,52mm(TAPING),1/0.6mm	1
3812-001283	J33	WIRE-NO SHEATH CU	FE+CU+SN,300V,52mm(TAPING),1/0.6mm	1
3812-001283	J34	WIRE-NO SHEATH CU	FE+CU+SN,300V,52mm(TAPING),1/0.6mm	1
3812-001283	J35	WIRE-NO SHEATH CU	FE+CU+SN,300V,52mm(TAPING),1/0.6mm	1
3812-001283	J36	WIRE-NO SHEATH CU	FE+CU+SN,300V,52mm(TAPING),1/0.6mm	1
3812-001283	J38	WIRE-NO SHEATH CU	FE+CU+SN,300V,52mm(TAPING),1/0.6mm	1
3812-001283	J4	WIRE-NO SHEATH CU	FE+CU+SN,300V,52mm(TAPING),1/0.6mm	1
3812-001283	J40	WIRE-NO SHEATH CU	FE+CU+SN,300V,52mm(TAPING),1/0.6mm	1
3812-001283	J42	WIRE-NO SHEATH CU	FE+CU+SN,300V,52mm(TAPING),1/0.6mm	1
3812-001283	J43	WIRE-NO SHEATH CU	FE+CU+SN,300V,52mm(TAPING),1/0.6mm	1
3812-001283	J44	WIRE-NO SHEATH CU	FE+CU+SN,300V,52mm(TAPING),1/0.6mm	1

3812-001283	J45	WIRE-NO SHEATH CU	FE+CU+SN,300V,52mm(TAPING),1/0.6mm	1
3812-001283	J46	WIRE-NO SHEATH CU	FE+CU+SN,300V,52mm(TAPING),1/0.6mm	1
3812-001283	J49	WIRE-NO SHEATH CU	FE+CU+SN,300V,52mm(TAPING),1/0.6mm	1
3812-001283	J5	WIRE-NO SHEATH CU	FE+CU+SN,300V,52mm(TAPING),1/0.6mm	1
3812-001283	J50	WIRE-NO SHEATH CU	FE+CU+SN,300V,52mm(TAPING),1/0.6mm	1
3812-001283	J51	WIRE-NO SHEATH CU	FE+CU+SN,300V,52mm(TAPING),1/0.6mm	1
3812-001283	J52	WIRE-NO SHEATH CU	FE+CU+SN,300V,52mm(TAPING),1/0.6mm	1
3812-001283	J53	WIRE-NO SHEATH CU	FE+CU+SN,300V,52mm(TAPING),1/0.6mm	1
3812-001283	J54	WIRE-NO SHEATH CU	FE+CU+SN,300V,52mm(TAPING),1/0.6mm	1
3812-001283	J56	WIRE-NO SHEATH CU	FE+CU+SN,300V,52mm(TAPING),1/0.6mm	1
3812-001283	J58	WIRE-NO SHEATH CU	FE+CU+SN,300V,52mm(TAPING),1/0.6mm	1
3812-001283	J59	WIRE-NO SHEATH CU	FE+CU+SN,300V,52mm(TAPING),1/0.6mm	1
3812-001283	J6	WIRE-NO SHEATH CU	FE+CU+SN,300V,52mm(TAPING),1/0.6mm	1
3812-001283	J7	WIRE-NO SHEATH CU	FE+CU+SN,300V,52mm(TAPING),1/0.6mm	1
3812-001283	J71	WIRE-NO SHEATH CU	FE+CU+SN,300V,52mm(TAPING),1/0.6mm	1
3812-001283	J73	WIRE-NO SHEATH CU	FE+CU+SN,300V,52mm(TAPING),1/0.6mm	1
3812-001283	J8	WIRE-NO SHEATH CU	FE+CU+SN,300V,52mm(TAPING),1/0.6mm	1
3812-001283	J9	WIRE-NO SHEATH CU	FE+CU+SN,300V,52mm(TAPING),1/0.6mm	1
6042-000001	C101-1	EYELET	ID2.2,OD2.7,L3.1,NI+SN,BSP3-1/2H	1
6042-000001	C101-2	EYELET	ID2.2,OD2.7,L3.1,NI+SN,BSP3-1/2H	1
6042-000002	CN71-1	EYELET	ID1.5,OD2,L2.8,NI+SN,BSP3-1/2H	1
6042-000002	CN71-2	EYELET	ID1.5,OD2,L2.8,NI+SN,BSP3-1/2H	1
6042-000002	F701-1	EYELET	ID1.5,OD2,L2.8,NI+SN,BSP3-1/2H	1
6042-000002	F701-2	EYELET	ID1.5,OD2,L2.8,NI+SN,BSP3-1/2H	1
0402-001192	D103	DIODE-RECTIFIER	ES2D,200V,2A,SMB,TP	1
0402-001427	D102	DIODE-RECTIFIER	ES1D,200V,1A,DO-214AC,TP	1
0403-000258	ZD02	DIODE-ZENER	BZX84C5V6,5.2-6V,225mW,SOT-23,TP	1
0403-001285	ZD01	DIODE-ZENER	BZX84-C11,10.4-11.6V,350mW,SOT-23,TP	1
0406-001204	CD81	DIODE-TVS	SMBJ5.0CA,6.4/-/7.25V,600W,SMB	1
0406-001204	CD82	DIODE-TVS	SMBJ5.0CA,6.4/-/7.25V,600W,SMB	1
0406-001204	CD83	DIODE-TVS	SMBJ5.0CA,6.4/-/7.25V,600W,SMB	1
0501-000294	Q701	TR-SMALL SIGNAL	KSA708-Y,PNP,800mW,TO-92,TP,12	1
0501-000534	Q601	TR-SMALL SIGNAL	2SC2412K,NPN,200mW,SOT-23,TP,180-390	1
0504-001064	Q101	TR-DIGITAL	DTC114EKA,NPN,200mW,10K/10K,SOT-23,TP	1
0506-000175	IC05	TR-ARRAY	2003,NPN,7,1W,SOP-16,ST,1000	1
0506-000175	IC06	TR-ARRAY	2003,NPN,7,1W,SOP-16,ST,1000	1
0604-001002	PC01	PHOTO-COUPLER	TR,100-600%,200mW,SOP-4,TP	1
0604-001002	PC03	PHOTO-COUPLER	TR,100-600%,200mW,SOP-4,TP	1
0604-001002	PC04	PHOTO-COUPLER	TR,100-600%,200mW,SOP-4,TP	1
0604-001002	PC05	PHOTO-COUPLER	TR,100-600%,200mW,SOP-4,TP	1
0604-001172	PC02	PHOTO-COUPLER	TR,150-300,200mW,SOP,TP	1
0801-000393	IC08	IC-CMOS LOGIC	74HC86,OR GATE,SOP,14P,150MIL,QUAD,ST,- ,2.0/6.0V,0.26V,-40to+85C,180mW,4.2V,1uA,	1
1006-001325	IC07	IC-BUS TRANSCEIVER	ISL81487LIBZ,SO,8P,4.9x3.8 mm,SINGLE,ST,PLASTIC,5V,-	1
1103-001431	IC03	IC-EEPROM	AT24C08BN,8Kbit,1Kx8,SOP,8P,4.9x3.9mm,1.8/5.5,- 40to+85C,18uA,TP	1
2007-000033	J1	R-CHIP	0ohm,5%,1/4W,TP,3216	1

2007-000033	J27	R-CHIP	0ohm,5%,1/4W,TP,3216	1
2007-000033	J37	R-CHIP	0ohm,5%,1/4W,TP,3216	1
2007-000033	J39	R-CHIP	0ohm,5%,1/4W,TP,3216	1
2007-000033	J41	R-CHIP	0ohm,5%,1/4W,TP,3216	1
2007-000033	J47	R-CHIP	0ohm,5%,1/4W,TP,3216	1
2007-000033	J48	R-CHIP	0ohm,5%,1/4W,TP,3216	1
2007-000033	J55	R-CHIP	0ohm,5%,1/4W,TP,3216	1
2007-000033	J57	R-CHIP	0ohm,5%,1/4W,TP,3216	1
2007-000033	J60	R-CHIP	0ohm,5%,1/4W,TP,3216	1
2007-000033	J62	R-CHIP	0ohm,5%,1/4W,TP,3216	1
2007-000033	J63	R-CHIP	0ohm,5%,1/4W,TP,3216	1
2007-000033	J64	R-CHIP	0ohm,5%,1/4W,TP,3216	1
2007-000033	J65	R-CHIP	0ohm,5%,1/4W,TP,3216	1
2007-000033	J66	R-CHIP	0ohm,5%,1/4W,TP,3216	1
2007-000033	J67	R-CHIP	0ohm,5%,1/4W,TP,3216	1
2007-000033	J68	R-CHIP	0ohm,5%,1/4W,TP,3216	1
2007-000033	J69	R-CHIP	0ohm,5%,1/4W,TP,3216	1
2007-000033	J70	R-CHIP	0ohm,5%,1/4W,TP,3216	1
2007-000033	J72	R-CHIP	0ohm,5%,1/4W,TP,3216	1
2007-000070	R806	R-CHIP	0ohm,5%,1/10W,TP,1608	1
2007-000074	R110	R-CHIP	100ohm,5%,1/10W,TP,1608	1
2007-000074	R809	R-CHIP	100ohm,5%,1/10W,TP,1608	1
2007-000074	R811	R-CHIP	100ohm,5%,1/10W,TP,1608	1
2007-000076	R403	R-CHIP	330ohm,5%,1/10W,TP,1608	1
2007-000076	R404	R-CHIP	330ohm,5%,1/10W,TP,1608	1
2007-000076	R601	R-CHIP	330ohm,5%,1/10W,TP,1608	1
2007-000076	R602	R-CHIP	330ohm,5%,1/10W,TP,1608	1
2007-000077	R116	R-CHIP	470ohm,5%,1/10W,TP,1608	1
2007-000078	R206	R-CHIP	1Kohm,5%,1/10W,TP,1608	1
2007-000078	R706	R-CHIP	1Kohm,5%,1/10W,TP,1608	1
2007-000078	R805	R-CHIP	1Kohm,5%,1/10W,TP,1608	1
2007-000078	R812	R-CHIP	1Kohm,5%,1/10W,TP,1608	1
2007-000078	R813	R-CHIP	1Kohm,5%,1/10W,TP,1608	1
2007-000078	R903	R-CHIP	1Kohm,5%,1/10W,TP,1608	1
2007-000081	R111	R-CHIP	2.7Kohm,5%,1/10W,TP,1608	1
2007-000084	R205	R-CHIP	4.7Kohm,5%,1/10W,TP,1608	1
2007-000084	R502	R-CHIP	4.7Kohm,5%,1/10W,TP,1608	1
2007-000084	R503	R-CHIP	4.7Kohm,5%,1/10W,TP,1608	1
2007-000084	R504	R-CHIP	4.7Kohm,5%,1/10W,TP,1608	1
2007-000084	R707	R-CHIP	4.7Kohm,5%,1/10W,TP,1608	1
2007-000090	R701	R-CHIP	10Kohm,5%,1/10W,TP,1608	1
2007-000090	R702	R-CHIP	10Kohm,5%,1/10W,TP,1608	1
2007-000090	R704	R-CHIP	10Kohm,5%,1/10W,TP,1608	1
2007-000090	R705	R-CHIP	10Kohm,5%,1/10W,TP,1608	1
2007-000090	R801	R-CHIP	10Kohm,5%,1/10W,TP,1608	1
2007-000090	R802	R-CHIP	10Kohm,5%,1/10W,TP,1608	1
2007-000090	R803	R-CHIP	10Kohm,5%,1/10W,TP,1608	1
2007-000090	R804	R-CHIP	10Kohm,5%,1/10W,TP,1608	1
2007-000090	R807	R-CHIP	10Kohm,5%,1/10W,TP,1608	1
2007-000090	R808	R-CHIP	10Kohm,5%,1/10W,TP,1608	1

2007-000090	R810	R-CHIP	10Kohm, 5%, 1/10W, TP, 1608	1
2007-000097	R902	R-CHIP	47Kohm, 5%, 1/10W, TP, 1608	1
2007-000109	R507	R-CHIP	1Mohm, 5%, 1/10W, TP, 1608	1
2007-000116	R501	R-CHIP	120ohm, 5%, 1/10W, TP, 1608	1
2007-000239	R506	R-CHIP	1.5Kohm, 1%, 1/10W, TP, 1608	1
2007-000385	R115	R-CHIP	14.3Kohm, 1%, 1/4W, TP, 3216	1
2007-000481	R101	R-CHIP	1Mohm, 5%, 1/4W, TP, 3216	1
2007-000481	R102	R-CHIP	1Mohm, 5%, 1/4W, TP, 3216	1
2007-000481	R103	R-CHIP	1Mohm, 5%, 1/4W, TP, 3216	1
2007-000781	R106	R-CHIP	33ohm, 5%, 1/8W, TP, 2012	1
2007-000924	R112	R-CHIP	470Kohm, 1%, 1/4W, TP, 3216	1
2007-000924	R113	R-CHIP	470Kohm, 1%, 1/4W, TP, 3216	1
2007-000924	R114	R-CHIP	470Kohm, 1%, 1/4W, TP, 3216	1
2007-001068	R401	R-CHIP	6.8Kohm, 1%, 1/10W, TP, 1608	1
2007-001068	R402	R-CHIP	6.8Kohm, 1%, 1/10W, TP, 1608	1
2007-001074	R107	R-CHIP	6.8ohm, 5%, 1/8W, TP, 2012	1
2007-001093	R703	R-CHIP	620ohm, 5%, 1/10W, TP, 1608	1
2007-001179	R708	R-CHIP	8.2Kohm, 5%, 1/10W, TP, 1608	1
2007-007385	R117	R-CHIP	1.2Mohm, 1%, 1/4w, TP, 3216	1
2203-000189	C802	C-CER, CHIP	100nF, +80-20%, 25V, Y5V, TP, 1608	1
2203-000189	C803	C-CER, CHIP	100nF, +80-20%, 25V, Y5V, TP, 1608	1
2203-000257	C503	C-CER, CHIP	10nF, 10%, 50V, X7R, TP, 1608	1
2203-000257	C705	C-CER, CHIP	10nF, 10%, 50V, X7R, TP, 1608	1
2203-000257	C801	C-CER, CHIP	10nF, 10%, 50V, X7R, TP, 1608	1
2203-000257	C808	C-CER, CHIP	10nF, 10%, 50V, X7R, TP, 1608	1
2203-000257	C809	C-CER, CHIP	10nF, 10%, 50V, X7R, TP, 1608	1
2203-000440	C901	C-CER, CHIP	1nF, 10%, 50V, X7R, TP, 1608	1
2203-005148	C501	C-CER, CHIP	100nF, 10%, 16V, X7R, TP, 1608	1
2203-005148	C504	C-CER, CHIP	100nF, 10%, 16V, X7R, TP, 1608	1
2203-005148	C505	C-CER, CHIP	100nF, 10%, 16V, X7R, TP, 1608	1
2203-005148	C506	C-CER, CHIP	100nF, 10%, 16V, X7R, TP, 1608	1
2203-005148	C507	C-CER, CHIP	100nF, 10%, 16V, X7R, TP, 1608	1
2203-005148	C509	C-CER, CHIP	100nF, 10%, 16V, X7R, TP, 1608	1
2203-005148	C513	C-CER, CHIP	100nF, 10%, 16V, X7R, TP, 1608	1
2203-005249	C104	C-CER, CHIP	100nF, 10%, 50V, X7R, TP, 1608	1
2203-005249	C110	C-CER, CHIP	100nF, 10%, 50V, X7R, TP, 1608	1
2203-005249	C112	C-CER, CHIP	100nF, 10%, 50V, X7R, TP, 1608	1
2203-005249	C113	C-CER, CHIP	100nF, 10%, 50V, X7R, TP, 1608	1
2203-005249	C201	C-CER, CHIP	100nF, 10%, 50V, X7R, TP, 1608	1
2203-005249	C401	C-CER, CHIP	100nF, 10%, 50V, X7R, TP, 1608	1
2203-005249	C402	C-CER, CHIP	100nF, 10%, 50V, X7R, TP, 1608	1
2203-005249	C508	C-CER, CHIP	100nF, 10%, 50V, X7R, TP, 1608	1
2203-005249	C511	C-CER, CHIP	100nF, 10%, 50V, X7R, TP, 1608	1
2203-005249	C514	C-CER, CHIP	100nF, 10%, 50V, X7R, TP, 1608	1
2203-005249	C702	C-CER, CHIP	100nF, 10%, 50V, X7R, TP, 1608	1
2203-005249	C704	C-CER, CHIP	100nF, 10%, 50V, X7R, TP, 1608	1
2203-005249	C707	C-CER, CHIP	100nF, 10%, 50V, X7R, TP, 1608	1
2203-005249	C805	C-CER, CHIP	100nF, 10%, 50V, X7R, TP, 1608	1
2203-005249	C806	C-CER, CHIP	100nF, 10%, 50V, X7R, TP, 1608	1
2203-005249	C807	C-CER, CHIP	100nF, 10%, 50V, X7R, TP, 1608	1

2203-006104	C708	C-CER,CHIP	1000nF,10%,50V,X7R,TP,3225,2.5T	1
2203-006348	C502	C-CER,CHIP	1000nF,10%,25V,X5R,TP,1608	1
2203-006348	C510	C-CER,CHIP	1000nF,10%,25V,X5R,TP,1608	1
2203-006348	C512	C-CER,CHIP	1000nF,10%,25V,X5R,TP,1608	1
2203-006460	C804	C-CER,CHIP	2200nF,10%,16V,X5R,TP,1608,-	1
DB41-00975A	PCB	PCB MAIN-IN	11R_RAC_INV_BLDC,FR-1,1,T1.6,120*120,2	1
DB91-01114A	IC04	ASSY-MIC	2011'R RAC INV POS Indoor Main Micom	1
DB09-00535A	IC04-1	IC MICOM	S3F4A1H,100P,DC5V,12 MHz,TQFP,16 Bit,16 Bit,TQFP,QFP,16 Bit,-40~+105,512K	1
DB98-31449A	MICOM LABEL	ASSY-LABEL MICOM	QFP,64P,WHT,9*9	1

■ INDOOR SUB PCB(DB93-10861A)

Parts Code	Locatio	Description	Specification	Q'TY
0601-003048	LED5	LED	ROUND,GRN,3 PI,573mm,3.0x5.0mm	1
0601-003048	LED6	LED	ROUND,GRN,3 PI,573mm,3.0x5.0mm	1
0601-003048	LED7	LED	ROUND,GRN,3 PI,573mm,3.0x5.0mm	1
3404-001220	SW01	SWITCH-TACT	12V,50mA,160gf,6x6x5,SPST	1
DB41-01017A	PCB	PCB SUB-DISPLAY	FR-1,T1.6	1
0401-001099	D01	DIODE-SWITCHING	1N4148WS,75V,150mA,SOD-323,TP	1
0504-000127	Q01	TR-DIGITAL	FJV3102R,NPN,200mW,10K/10Kohm,SOT-23,TP	1
0504-000127	Q02	TR-DIGITAL	FJV3102R,NPN,200mW,10K/10Kohm,SOT-23,TP	1
0504-000127	Q03	TR-DIGITAL	FJV3102R,NPN,200mW,10K/10Kohm,SOT-23,TP	1
2007-000033	J1	R-CHIP	0ohm,5%,1/4W,TP,3216	1
2007-000033	J2	R-CHIP	0ohm,5%,1/4W,TP,3216	1
2007-000072	R03	R-CHIP	47ohm,5%,1/10W,TP,1608	1
2007-000084	R01	R-CHIP	4.7Kohm,5%,1/10W,TP,1608	1
2007-000090	R02	R-CHIP	10Kohm,5%,1/10W,TP,1608	1
2007-001318	R04	R-CHIP	1Kohm,5%,1/4W,TP,3216	1
2007-001318	R05	R-CHIP	1Kohm,5%,1/4W,TP,3216	1
2007-001318	R06	R-CHIP	1Kohm,5%,1/4W,TP,3216	1
2007-001318	R07	R-CHIP	1Kohm,5%,1/4W,TP,3216	1
2007-001318	R08	R-CHIP	1Kohm,5%,1/4W,TP,3216	1
2007-001318	R09	R-CHIP	1Kohm,5%,1/4W,TP,3216	1
2203-000440	C03	C-CER,CHIP	1nF,10%,50V,X7R,TP,1608	1
2203-005249	C01	C-CER,CHIP	100nF,10%,50V,X7R,TP,1608	1
2203-005249	C02	C-CER,CHIP	100nF,10%,50V,X7R,TP,1608	1
0609-001391	IC01	MODULE REMOCON	6.5mm,TRAY	1
2401-002619	C04	C-AL	47uF,20%,25V,GP,TP,5x11,5	1
3711-004742	CN01	HEADER-BOARD TO CABLE	BOX,9P,1R,2mm,ANGLE,SN,NTR	1
DB93-10943B	CN01-1	ASSY CONNECTOR WIRE	STAR-PJT,DISPLAY TO MAIN,MILLION MODEL	1

■ OUTDOOR MAIN PCB AQV**P*A(DB93-10938A)

Parts Code	Location	Description	Specification	Q'TY
0401-001099	D020	DIODE-SWITCHING	1N4148WS,75V,150mA,SOD-323,TP	1
0401-001099	D021	DIODE-SWITCHING	1N4148WS,75V,150mA,SOD-323,TP	1
0401-001099	D030	DIODE-SWITCHING	1N4148WS,75V,150mA,SOD-323,TP	1
0401-001099	D040	DIODE-SWITCHING	1N4148WS,75V,150mA,SOD-323,TP	1
0401-001099	D501	DIODE-SWITCHING	1N4148WS,75V,150mA,SOD-323,TP	1
0401-001099	D503	DIODE-SWITCHING	1N4148WS,75V,150mA,SOD-323,TP	1
0401-001099	D551	DIODE-SWITCHING	1N4148WS,75V,150mA,SOD-323,TP	1
0401-001099	D552	DIODE-SWITCHING	1N4148WS,75V,150mA,SOD-323,TP	1
0402-001192	D154	DIODE-RECTIFIER	ES2D,200V,2A,SMB,TP	1
0402-001192	D155	DIODE-RECTIFIER	ES2D,200V,2A,SMB,TP	1
0402-001298	BD151	DIODE-BRIDGE	DF06S,600V,1A,SMD-4,TP	1
0402-001427	D152	DIODE-RECTIFIER	ES1D,200V,1A,DO-214AC,TP	1
0402-001427	D153	DIODE-RECTIFIER	ES1D,200V,1A,DO-214AC,TP	1
0402-001429	D151	DIODE-RECTIFIER	US1J,600V,1A,DO-214AC,TP	1
0403-001499	ZD051	DIODE-ZENER	MMSZ5252B,22.8/25.2V,500mW,SOD-123,TP	1
0403-001499	ZD401	DIODE-ZENER	MMSZ5252B,22.8/25.2V,500mW,SOD-123,TP	1
0404-001020	D451	DIODE-SCHOTTKY	BAT54C,30V,200mA,SOT-23,TP	1
0404-001020	D452	DIODE-SCHOTTKY	BAT54C,30V,200mA,SOT-23,TP	1
0404-001020	D453	DIODE-SCHOTTKY	BAT54C,30V,200mA,SOT-23,TP	1
0404-001020	D454	DIODE-SCHOTTKY	BAT54C,30V,200mA,SOT-23,TP	1
0404-001020	D491	DIODE-SCHOTTKY	BAT54C,30V,200mA,SOT-23,TP	1
0404-001020	D492	DIODE-SCHOTTKY	BAT54C,30V,200mA,SOT-23,TP	1
0404-001020	D502	DIODE-SCHOTTKY	BAT54C,30V,200mA,SOT-23,TP	1
0404-001020	D553	DIODE-SCHOTTKY	BAT54C,30V,200mA,SOT-23,TP	1
0407-000123	D611	DIODE-SWITCHING	DAN202K,80V,100mA,SOT-23,TP	1
0501-000534	Q301	TR-SMALL SIGNAL	2SC2412K,NPN,200mW,SOT-23,TP,180-390	1
0501-000534	Q651	TR-SMALL SIGNAL	2SC2412K,NPN,200mW,SOT-23,TP,180-390	1
0501-000534	Q652	TR-SMALL SIGNAL	2SC2412K,NPN,200mW,SOT-23,TP,180-390	1
0506-000175	IC801	TR-ARRAY	2003,NPN,7,1W,SOP-16,ST,1000	1
0601-002423	LED801	LED	SMD,RED,1.6 X 3.2mm,639nm,1.6 X 3.2mm	1
0601-002955	LED803	LED	SMD(REVERSE),YEL,1.6x1.5mm,588nm,3.2x1.6x1.1mm	1
0601-002956	LED802	LED	SMD(REVERSE),GRN,1.6x1.5mm,3.2x1.6x1.1mm	1
0604-001148	IC301	PHOTO-COUPLER	TR,50-600%,200mW,SMD-4,TP	1
0604-001172	IC152	PHOTO-COUPLER	TR,150-300,200mW,SOP,TP	1
1201-002946	IC451	IC-OP AMP	TSSOP,TR,14P,5x4.4x1.2mm,100,5.5V,-40to+85C,63dB,1,1nA,1nA,1.7mV	1
1202-000104	IC251	IC-VOLTAGE COMP.	393,SOP,8P,150MIL,DUAL,36V,CMOS,PLASTIC,18V,780mW,0to+70C,18V,5mV,250nA,50NA,30	1
1202-000104	IC611	IC-VOLTAGE COMP.	393,SOP,8P,150MIL,DUAL,36V,CMOS,PLASTIC,18V,780mW,0to+70C,18V,5mV,250nA,50NA,30	1
1203-005454	IC153	IC-POSI.FIXED REG.	LD1117S33-HF,SOT-223,4P,6.5x3.5mm,PLASTIC,3.267/3.333,-40to+125C,0.8,TP	1
2007-000029	R166	R-CHIP	0ohm,5%,1/8W,TP,2012	1
2007-000043	R054	R-CHIP	1Kohm,1%,1/10W,TP,1608	1
2007-000052	R309	R-CHIP	10Kohm,1%,1/10W,TP,1608	1
2007-000066	R155	R-CHIP	20Kohm,1%,1/10W,TP,1608	1
2007-000066	R255	R-CHIP	20Kohm,1%,1/10W,TP,1608	1
2007-000066	R469	R-CHIP	20Kohm,1%,1/10W,TP,1608	1
2007-000066	R472	R-CHIP	20Kohm,1%,1/10W,TP,1608	1

2007-000066	R473	R-CHIP	20Kohm,1%,1/10W,TP,1608	1
2007-000074	R053	R-CHIP	100ohm,5%,1/10W,TP,1608	1
2007-000074	R057	R-CHIP	100ohm,5%,1/10W,TP,1608	1
2007-000074	R401	R-CHIP	100ohm,5%,1/10W,TP,1608	1
2007-000074	R402	R-CHIP	100ohm,5%,1/10W,TP,1608	1
2007-000074	R403	R-CHIP	100ohm,5%,1/10W,TP,1608	1
2007-000074	R404	R-CHIP	100ohm,5%,1/10W,TP,1608	1
2007-000074	R405	R-CHIP	100ohm,5%,1/10W,TP,1608	1
2007-000074	R406	R-CHIP	100ohm,5%,1/10W,TP,1608	1
2007-000074	R507	R-CHIP	100ohm,5%,1/10W,TP,1608	1
2007-000076	R509	R-CHIP	330ohm,5%,1/10W,TP,1608	1
2007-000077	R557	R-CHIP	470ohm,5%,1/10W,TP,1608	1
2007-000077	R558	R-CHIP	470ohm,5%,1/10W,TP,1608	1
2007-000077	R661	R-CHIP	470ohm,5%,1/10W,TP,1608	1
2007-000077	R662	R-CHIP	470ohm,5%,1/10W,TP,1608	1
2007-000078	R310	R-CHIP	1Kohm,5%,1/10W,TP,1608	1
2007-000078	R311	R-CHIP	1Kohm,5%,1/10W,TP,1608	1
2007-000078	R501	R-CHIP	1Kohm,5%,1/10W,TP,1608	1
2007-000078	R510	R-CHIP	1Kohm,5%,1/10W,TP,1608	1
2007-000078	R511	R-CHIP	1Kohm,5%,1/10W,TP,1608	1
2007-000078	R512	R-CHIP	1Kohm,5%,1/10W,TP,1608	1
2007-000078	R514	R-CHIP	1Kohm,5%,1/10W,TP,1608	1
2007-000078	R517	R-CHIP	1Kohm,5%,1/10W,TP,1608	1
2007-000078	R651	R-CHIP	1Kohm,5%,1/10W,TP,1608	1
2007-000080	R256	R-CHIP	2Kohm,5%,1/10W,TP,1608	1
2007-000080	R257	R-CHIP	2Kohm,5%,1/10W,TP,1608	1
2007-000080	R409	R-CHIP	2Kohm,5%,1/10W,TP,1608	1
2007-000080	R504	R-CHIP	2Kohm,5%,1/10W,TP,1608	1
2007-000080	R621	R-CHIP	2Kohm,5%,1/10W,TP,1608	1
2007-000082	R052	R-CHIP	3.3Kohm,5%,1/10W,TP,1608	1
2007-000084	R408	R-CHIP	4.7Kohm,5%,1/10W,TP,1608	1
2007-000084	R551	R-CHIP	4.7Kohm,5%,1/10W,TP,1608	1
2007-000084	R552	R-CHIP	4.7Kohm,5%,1/10W,TP,1608	1
2007-000084	R553	R-CHIP	4.7Kohm,5%,1/10W,TP,1608	1
2007-000084	R554	R-CHIP	4.7Kohm,5%,1/10W,TP,1608	1
2007-000084	R555	R-CHIP	4.7Kohm,5%,1/10W,TP,1608	1
2007-000084	R556	R-CHIP	4.7Kohm,5%,1/10W,TP,1608	1
2007-000090	R502	R-CHIP	10Kohm,5%,1/10W,TP,1608	1
2007-000090	R515	R-CHIP	10Kohm,5%,1/10W,TP,1608	1
2007-000090	R516	R-CHIP	10Kohm,5%,1/10W,TP,1608	1
2007-000090	R559	R-CHIP	10Kohm,5%,1/10W,TP,1608	1
2007-000090	R560	R-CHIP	10Kohm,5%,1/10W,TP,1608	1
2007-000090	R561	R-CHIP	10Kohm,5%,1/10W,TP,1608	1
2007-000090	R663	R-CHIP	10Kohm,5%,1/10W,TP,1608	1
2007-000090	R664	R-CHIP	10Kohm,5%,1/10W,TP,1608	1
2007-000093	R508	R-CHIP	20Kohm,5%,1/10W,TP,1608	1
2007-000106	R506	R-CHIP	220Kohm,5%,1/10W,TP,1608	1
2007-000109	R503	R-CHIP	1Mohm,5%,1/10W,TP,1608	1
2007-000120	R313	R-CHIP	680ohm,5%,1/10W,TP,1608	1
2007-000227	R167	R-CHIP	1.2Mohm,5%,1/4W,TP,3216	1

2007-000238	R312	R-CHIP	1.5Kohm, 1%, 1/8W, TP, 2012	1
2007-000238	R314	R-CHIP	1.5Kohm, 1%, 1/8W, TP, 2012	1
2007-000263	R614	R-CHIP	1.82Kohm, 1%, 1/8W, TP, 2012	1
2007-000263	R616	R-CHIP	1.82Kohm, 1%, 1/8W, TP, 2012	1
2007-000468	R801	R-CHIP	1Kohm, 5%, 1/8W, TP, 2012	1
2007-000468	R802	R-CHIP	1Kohm, 5%, 1/8W, TP, 2012	1
2007-000468	R803	R-CHIP	1Kohm, 5%, 1/8W, TP, 2012	1
2007-000481	R163	R-CHIP	1Mohm, 5%, 1/4W, TP, 3216	1
2007-000481	R164	R-CHIP	1Mohm, 5%, 1/4W, TP, 3216	1
2007-000481	R165	R-CHIP	1Mohm, 5%, 1/4W, TP, 3216	1
2007-000614	R470	R-CHIP	24Kohm, 1%, 1/10W, TP, 1608	1
2007-000614	R471	R-CHIP	24Kohm, 1%, 1/10W, TP, 1608	1
2007-000614	R474	R-CHIP	24Kohm, 1%, 1/10W, TP, 1608	1
2007-000614	R475	R-CHIP	24Kohm, 1%, 1/10W, TP, 1608	1
2007-000614	R478	R-CHIP	24Kohm, 1%, 1/10W, TP, 1608	1
2007-000669	R254	R-CHIP	2Kohm, 1%, 1/10W, TP, 1608	1
2007-000669	R476	R-CHIP	2Kohm, 1%, 1/10W, TP, 1608	1
2007-000669	R477	R-CHIP	2Kohm, 1%, 1/10W, TP, 1608	1
2007-000683	R454	R-CHIP	3.3Kohm, 1%, 1/10W, TP, 1608	1
2007-000683	R459	R-CHIP	3.3Kohm, 1%, 1/10W, TP, 1608	1
2007-000683	R466	R-CHIP	3.3Kohm, 1%, 1/10W, TP, 1608	1
2007-000708	R253	R-CHIP	3.9Kohm, 1%, 1/10W, TP, 1608	1
2007-000869	R252	R-CHIP	4.7Kohm, 1%, 1/10W, TP, 1608	1
2007-000924	R106	R-CHIP	470Kohm, 1%, 1/4W, TP, 3216	1
2007-000924	R107	R-CHIP	470Kohm, 1%, 1/4W, TP, 3216	1
2007-000924	R108	R-CHIP	470Kohm, 1%, 1/4W, TP, 3216	1
2007-000924	R658	R-CHIP	470Kohm, 1%, 1/4W, TP, 3216	1
2007-000924	R659	R-CHIP	470Kohm, 1%, 1/4W, TP, 3216	1
2007-000924	R660	R-CHIP	470Kohm, 1%, 1/4W, TP, 3216	1
2007-000929	R153	R-CHIP	470ohm, 1%, 1/10W, TP, 1608	1
2007-000929	R154	R-CHIP	470ohm, 1%, 1/10W, TP, 1608	1
2007-000934	R158	R-CHIP	470ohm, 5%, 1/4W, TP, 3216	1
2007-000934	R159	R-CHIP	470ohm, 5%, 1/4W, TP, 3216	1
2007-000939	R652	R-CHIP	47Kohm, 1%, 1/10W, TP, 1608	1
2007-000944	R301	R-CHIP	47Kohm, 5%, 1/4W, TP, 3216	1
2007-000944	R302	R-CHIP	47Kohm, 5%, 1/4W, TP, 3216	1
2007-000944	R303	R-CHIP	47Kohm, 5%, 1/4W, TP, 3216	1
2007-000944	R304	R-CHIP	47Kohm, 5%, 1/4W, TP, 3216	1
2007-000944	R305	R-CHIP	47Kohm, 5%, 1/4W, TP, 3216	1
2007-000944	R306	R-CHIP	47Kohm, 5%, 1/4W, TP, 3216	1
2007-000944	R307	R-CHIP	47Kohm, 5%, 1/4W, TP, 3216	1
2007-000944	R308	R-CHIP	47Kohm, 5%, 1/4W, TP, 3216	1
2007-000962	R055	R-CHIP	5.1Kohm, 1%, 1/10W, TP, 1608	1
2007-000962	R654	R-CHIP	5.1Kohm, 1%, 1/10W, TP, 1608	1
2007-001068	R491	R-CHIP	6.8Kohm, 1%, 1/10W, TP, 1608	1
2007-001074	R152	R-CHIP	6.8ohm, 5%, 1/8W, TP, 2012	1
2007-001174	R104	R-CHIP	8.25Kohm, 1%, 1/4W, TP, 3216	1
2007-001174	R657	R-CHIP	8.25Kohm, 1%, 1/4W, TP, 3216	1
2007-001175	R056	R-CHIP	8.2Kohm, 1%, 1/10W, TP, 1608	1
2007-001175	R410	R-CHIP	8.2Kohm, 1%, 1/10W, TP, 1608	1
2007-001175	R655	R-CHIP	8.2Kohm, 1%, 1/10W, TP, 1608	1

2007-002637	R611	R-CHIP	60.4Kohm,1%,1/4W,TP,3216	1
2007-002637	R612	R-CHIP	60.4Kohm,1%,1/4W,TP,3216	1
2007-002637	R613	R-CHIP	60.4Kohm,1%,1/4W,TP,3216	1
2007-002637	R615	R-CHIP	60.4Kohm,1%,1/4W,TP,3216	1
2007-002637	R617	R-CHIP	60.4Kohm,1%,1/4W,TP,3216	1
2007-002637	R618	R-CHIP	60.4Kohm,1%,1/4W,TP,3216	1
2007-007225	R455	R-CHIP	1.62Kohm,1%,1/10W,TP,1608	1
2007-007225	R457	R-CHIP	1.62Kohm,1%,1/10W,TP,1608	1
2007-007225	R468	R-CHIP	1.62Kohm,1%,1/10W,TP,1608	1
2007-007225	R492	R-CHIP	1.62Kohm,1%,1/10W,TP,1608	1
2007-007342	R157	R-CHIP	1.82Kohm,1%,1/10W,TP,1608	1
2007-007445	R156	R-CHIP	9.09Kohm,1%,1/10W,TP,1608	1
2007-007768	R251	R-CHIP	13Kohm,1%,1/10W,TP,1608	1
2007-007768	R259	R-CHIP	13Kohm,1%,1/10W,TP,1608	1
2007-007818	R260	R-CHIP	360Kohm,1%,1/10W,TP,1608	1
2007-008003	R513	R-CHIP	4.7Mohm,1%,1/10W,TP,1608	1
2007-008023	R101	R-CHIP	100Kohm,5%,1W,TP,6432	1
2007-008023	R102	R-CHIP	100Kohm,5%,1W,TP,6432	1
2007-008023	R103	R-CHIP	100Kohm,5%,1W,TP,6432	1
2007-010245	R062	R-CHIP	0.01ohm,1%,2W,TP,6432	1
2007-010245	R063	R-CHIP	0.01ohm,1%,2W,TP,6432	1
2007-010245	R451	R-CHIP	0.01ohm,1%,2W,TP,6432	1
2007-010245	R452	R-CHIP	0.01ohm,1%,2W,TP,6432	1
2007-010245	R453	R-CHIP	0.01ohm,1%,2W,TP,6432	1
2203-000236	C054	C-CER,CHIP	0.1nF,5%,50V,C0G,TP,1608	1
2203-000257	C053	C-CER,CHIP	10nF,10%,50V,X7R,TP,1608	1
2203-000257	C057	C-CER,CHIP	10nF,10%,50V,X7R,TP,1608	1
2203-000257	C302	C-CER,CHIP	10nF,10%,50V,X7R,TP,1608	1
2203-000257	C303	C-CER,CHIP	10nF,10%,50V,X7R,TP,1608	1
2203-000257	C517	C-CER,CHIP	10nF,10%,50V,X7R,TP,1608	1
2203-000257	C518	C-CER,CHIP	10nF,10%,50V,X7R,TP,1608	1
2203-000257	C611	C-CER,CHIP	10nF,10%,50V,X7R,TP,1608	1
2203-000257	C612	C-CER,CHIP	10nF,10%,50V,X7R,TP,1608	1
2203-000257	C613	C-CER,CHIP	10nF,10%,50V,X7R,TP,1608	1
2203-000257	C651	C-CER,CHIP	10nF,10%,50V,X7R,TP,1608	1
2203-000440	C404	C-CER,CHIP	1nF,10%,50V,X7R,TP,1608	1
2203-000440	C406	C-CER,CHIP	1nF,10%,50V,X7R,TP,1608	1
2203-000440	C407	C-CER,CHIP	1nF,10%,50V,X7R,TP,1608	1
2203-000440	C409	C-CER,CHIP	1nF,10%,50V,X7R,TP,1608	1
2203-000440	C410	C-CER,CHIP	1nF,10%,50V,X7R,TP,1608	1
2203-000440	C411	C-CER,CHIP	1nF,10%,50V,X7R,TP,1608	1
2203-000440	C414	C-CER,CHIP	1nF,10%,50V,X7R,TP,1608	1
2203-000440	C501	C-CER,CHIP	1nF,10%,50V,X7R,TP,1608	1
2203-000440	C514	C-CER,CHIP	1nF,10%,50V,X7R,TP,1608	1
2203-000440	C515	C-CER,CHIP	1nF,10%,50V,X7R,TP,1608	1
2203-000440	C516	C-CER,CHIP	1nF,10%,50V,X7R,TP,1608	1
2203-000783	C455	C-CER,CHIP	0.33nF,5%,50V,C0G,1608	1
2203-000783	C458	C-CER,CHIP	0.33nF,5%,50V,C0G,1608	1
2203-002002	C453	C-CER,CHIP	0.033nF,5%,50V,NP0,TP,1608	1
2203-002002	C454	C-CER,CHIP	0.033nF,5%,50V,NP0,TP,1608	1

2203-002002	C459	C-CER,CHIP	0.033nF,5%,50V,NP0,TP,1608	1
2203-005249	C051	C-CER,CHIP	100nF,10%,50V,X7R,TP,1608	1
2203-005249	C052	C-CER,CHIP	100nF,10%,50V,X7R,TP,1608	1
2203-005249	C156	C-CER,CHIP	100nF,10%,50V,X7R,TP,1608	1
2203-005249	C157	C-CER,CHIP	100nF,10%,50V,X7R,TP,1608	1
2203-005249	C158	C-CER,CHIP	100nF,10%,50V,X7R,TP,1608	1
2203-005249	C159	C-CER,CHIP	100nF,10%,50V,X7R,TP,1608	1
2203-005249	C163	C-CER,CHIP	100nF,10%,50V,X7R,TP,1608	1
2203-005249	C251	C-CER,CHIP	100nF,10%,50V,X7R,TP,1608	1
2203-005249	C252	C-CER,CHIP	100nF,10%,50V,X7R,TP,1608	1
2203-005249	C401	C-CER,CHIP	100nF,10%,50V,X7R,TP,1608	1
2203-005249	C402	C-CER,CHIP	100nF,10%,50V,X7R,TP,1608	1
2203-005249	C403	C-CER,CHIP	100nF,10%,50V,X7R,TP,1608	1
2203-005249	C408	C-CER,CHIP	100nF,10%,50V,X7R,TP,1608	1
2203-005249	C460	C-CER,CHIP	100nF,10%,50V,X7R,TP,1608	1
2203-005249	C506	C-CER,CHIP	100nF,10%,50V,X7R,TP,1608	1
2203-005249	C507	C-CER,CHIP	100nF,10%,50V,X7R,TP,1608	1
2203-005249	C508	C-CER,CHIP	100nF,10%,50V,X7R,TP,1608	1
2203-005249	C509	C-CER,CHIP	100nF,10%,50V,X7R,TP,1608	1
2203-005249	C510	C-CER,CHIP	100nF,10%,50V,X7R,TP,1608	1
2203-005249	C511	C-CER,CHIP	100nF,10%,50V,X7R,TP,1608	1
2203-005249	C512	C-CER,CHIP	100nF,10%,50V,X7R,TP,1608	1
2203-005249	C519	C-CER,CHIP	100nF,10%,50V,X7R,TP,1608	1
2203-005249	C520	C-CER,CHIP	100nF,10%,50V,X7R,TP,1608	1
2203-005249	C521	C-CER,CHIP	100nF,10%,50V,X7R,TP,1608	1
2203-005249	C614	C-CER,CHIP	100nF,10%,50V,X7R,TP,1608	1
2203-005249	C801	C-CER,CHIP	100nF,10%,50V,X7R,TP,1608	1
2203-006104	C301	C-CER,CHIP	1000nF,10%,50V,X7R,TP,3225,2.5T	1
2203-006348	C253	C-CER,CHIP	1000nF,10%,25V,X5R,TP,1608	1
2203-006348	C502	C-CER,CHIP	1000nF,10%,25V,X5R,TP,1608	1
2203-006348	C503	C-CER,CHIP	1000nF,10%,25V,X5R,TP,1608	1
2203-006348	C504	C-CER,CHIP	1000nF,10%,25V,X5R,TP,1608	1
2203-006348	C505	C-CER,CHIP	1000nF,10%,25V,X5R,TP,1608	1
2203-006348	C523	C-CER,CHIP	1000nF,10%,25V,X5R,TP,1608	1
2402-001183	CE451	C-AL,SMD	22UF,20%,16V,WT,TP,5.3X5.3X6MM	1
2402-001268	CE051	C-AL,SMD	100uF,20%,25V,WT,TP,8x6.3mm	1
2402-001268	CE405	C-AL,SMD	100uF,20%,25V,WT,TP,8x6.3mm	1
2402-001368	CE402	C-AL,SMD	47uF,20%,25V,TP,6.3x4.9mm	1
2402-001368	CE403	C-AL,SMD	47uF,20%,25V,TP,6.3x4.9mm	1
2402-001368	CE404	C-AL,SMD	47uF,20%,25V,TP,6.3x4.9mm	1
2703-003657	L151	INDUCTOR-SMD	3.3uH,20%,3030	1
2802-001211	X501	RESONATOR-CERAMIC	8MHZ,0.1%,TP,3.2X1.3X0.9 MM	1
DB41-01011A	PCB	PCB MAIN-OUT	MALDIVES-PJT,FR-4,2,T1.6,142*175mm,1,OUT, OI-INVERTER,600V OVER	1
DB91-01172A	IC501	ASSY-MIC	MALDIVES OUTDOOR INV MICOM,STM-1037-OA, LM3S817, 48LQFP, ROM 64KB	1
DB09-00591A	-	IC MICOM	LM3S817,48,DC3V,50 MHz,LQFP,LQFP,LQFP,-40 ~ 85,64KB,LQFP	1
2003-000855	R151	R-METAL OXIDE(S)	47Kohm,5%,3W,AA,TP,6x16mm	1
2201-000153	C004	C-CERAMIC,DISC	10nF,+80-20%,250V,Y5V,-,14.6x6mm,7.5	1
2201-000153	C005	C-CERAMIC,DISC	10nF,+80-20%,250V,Y5V,-,14.6x6mm,7.5	1
2201-000322	C151	C-CERAMIC,DISC	2.2nF,10%,2000V,Y5P,13x5mm,10mm	1
2201-000322	C152	C-CERAMIC,DISC	2.2nF,10%,2000V,Y5P,13x5mm,10mm	1

2201-000446	C002	C-CERAMIC,DISC	3.3nF,20%,400V,Y5U,TP,15x6mm,10mm	1
2201-000446	C003	C-CERAMIC,DISC	3.3nF,20%,400V,Y5U,TP,15x6mm,10mm	1
2201-002128	C061	C-CERAMIC,DISC	4.7nF,20%,400V,Y5U,BK,15x7mm,10mm	1
2301-001285	C001	C-FILM,LEAD-PPF	680nF,10%,275V,BK,31x11x21mm	1
2301-001285	C006	C-FILM,LEAD-PPF	680nF,10%,275V,BK,31x11x21mm	1
2301-001992	CR041	C-FILM,LEAD	1500nF,+10-5%,450V,BK,36x16x26.5mm	1
2306-000123	C060	C-FILM,LEAD-PPF	100nF,5%,630V,BK,26x16.5x8.5mm	1
2306-000123	C400	C-FILM,LEAD-PPF	100nF,5%,630V,BK,26x16.5x8.5mm	1
2401-000481	CE152	C-AL	10uF,20%,50V,WT,TP,5x11,5	1
2401-001281	CE301	C-AL	4.7uF,20%,50V,WT,TP,5x11,5	1
2401-001548	CE159	C-AL	47uF,20%,25V,WT,TP,5x11,5	1
2401-001838	CE154	C-AL	470uF,20%,25V,WT,TP,10x16,5	1
2401-001838	CE157	C-AL	470uF,20%,25V,WT,TP,10x16,5	1
2401-003139	CE155	C-AL	1000uF,20%,25V,WT,TP,10*20,5mm	1
2401-003224	CE153	C-AL	470uF,20%,16V,WT,TP,8X11.5,5mm	1
2401-003224	CE156	C-AL	470uF,20%,16V,WT,TP,8X11.5,5mm	1
2401-003645	CE158	C-AL	1UF,20%,50V,WT,TP,4X5MM,5	1
2401-004267	CE151	C-AL	22uF,20%,500V,TP,16*25,7.5mm	1
2401-004874	CE101	C-AL	330uF,20%,400V,BK,25.4*50,10mm	1
2401-004874	CE102	C-AL	330uF,20%,400V,BK,25.4*50,10mm	1
2401-004874	CE103	C-AL	330uF,20%,400V,BK,25.4*50,10mm	1
3601-001538	F001	FUSE-AXIAL LEAD	250V,15A,TIME-LAG,CERAMIC,6.35x31.8mm	1
4715-001093	DSA001	SURGE ABSORBER	3600V,20%,2000A,-,AXIAL	1
1203-000002	IC157	IC-POSI.ADJUST REG.	431,TO-92,3P,-,PLASTIC,2.44/2.58V,775MV,0TO+70C,100MA,-,ST,-	1
1203-006089	IC151	IC-PWM CONTROLLER	TOP253PN,DIP,7P,6.35x9.57mm,PLASTIC,-0.3V/700V,15W,-40Cto+150C,1.37A,ST	1
1404-001274	NTC151	THERMISTOR-NTC	22ohm,1.4A,3100K,9.5mW/C,-,7.0,-	1
1404-001498	PTC020	THERMISTOR-PTC	40ohm,25%,290Vac,7A,TR	1
1405-000154	VA003	VARISTOR	460Vdc,2500A,17.5x7.5mm,TP	1
1405-000154	VA004	VARISTOR	460Vdc,2500A,17.5x7.5mm,TP	1
1405-000160	VA002	VARISTOR	680V,4500A,17.5x6.5mm,TP	1
1405-000160	VA151	VARISTOR	680V,4500A,17.5x6.5mm,TP	1
3501-000273	RY021	RELAY-POWER	12V,540mW,16000mA,1FormA,20ms,6ms	1
3501-001264	RY022	RELAY-POWER	12V,200mW,5000mA,1FormA,10ms,10ms	1
3501-001264	RY040	RELAY-POWER	12V,200mW,5000mA,1FormA,10ms,10ms	1
3501-001264	RY041	RELAY-POWER	12V,200mW,5000mA,1FormA,10ms,10ms	1
3704-001601	IC502	SOCKET-IC	8P,SN,2.54mm	1
3711-000015	CN251	HEADER-BOARD TO CABLE	BOX,2P,1R,2.5MM,STRAIGHT,SN,WHT	1
3711-000203	CN030	HEADER-BOARD TO CABLE	1WALL,2P/3P,1R,7.92mm,STRAIGHT,SN,WHT	1
3711-003381	CN040	CONNECTOR-HEADER	1WALL,5P,1R,3.96mm,ANGLE,SN,WHT	1
3711-007656	CN451	HEADER-BOARD TO CABLE	BOX,3,1R,6mm,STRAIGHT,WHT	1
3711-007659	CN051	HEADER-BOARD TO CABLE	2,1R,7.92mm,STRAIGHT,WHT	1
3711-007717	CN551	HEADER-BOARD TO CABLE	BOX,10P,1R,2mm,ANGLE,SN,RED	1
3712-001139	CN001	CONNECTOR-TERMINAL	TAB,MALE,6.35x0.8mm	1
3712-001139	CN002	CONNECTOR-TERMINAL	TAB,MALE,6.35x0.8mm	1
3712-001139	CN003	CONNECTOR-TERMINAL	TAB,MALE,6.35x0.8mm	1
3712-001139	CN301	CONNECTOR-TERMINAL	TAB,MALE,6.35x0.8mm	1
4719-002483	PFC050	POWER MODULE	Smart Power Module,FPAB20BH60B,600V,20A,89W,20kHz,PFCM	1
4719-002484	IPM400	POWER MODULE	Smart Power Module,FNA41560B2,600V,15A,41W,20kHz	1
DB26-00119A	PT151	TRANS SWITCHING	EE2218,TOP253PN(OI-INV),220V,EE22, NC-2H,15V, 12V, 6V,EE2218,50/60Hz,1618,15V, 12V, 6V,OI-INVERTER	1
DB27-00076A	FT001	COIL FILTER	MALDIVE,12mH,22m,10A	1

DB61-04692A	IPM_SUPPORT	SUPPORT-PBA	SI Inv(MALDIVES1 12k),PA66-FR(40),1.5,109,26.8,4.5,5V,4.5g,BLACK	1
DB67-00942A	VA002	CAP	VIVALDI-P/J,SHP2,-,-,-,GREEN,SSEC	1
DB67-00942A	VA003	CAP	VIVALDI-P/J,SHP2,-,-,-,GREEN,SSEC	1
DB67-00942A	VA004	CAP	VIVALDI-P/J,SHP2,-,-,-,GREEN,SSEC	1
DB67-00942A	VA151	CAP	VIVALDI-P/J,SHP2,-,-,-,GREEN,SSEC	1

■ OUTDOOR MAIN PCB AQV**PSB*(DB93-10952A)

Parts Code	Location	Description	Specification	Q'TY
0401-001099	D020	DIODE-SWITCHING	1N4148WS,75V,150mA,SOD-323,TP	1
0401-001099	D021	DIODE-SWITCHING	1N4148WS,75V,150mA,SOD-323,TP	1
0401-001099	D030	DIODE-SWITCHING	1N4148WS,75V,150mA,SOD-323,TP	1
0401-001099	D501	DIODE-SWITCHING	1N4148WS,75V,150mA,SOD-323,TP	1
0401-001099	D503	DIODE-SWITCHING	1N4148WS,75V,150mA,SOD-323,TP	1
0401-001099	D510	DIODE-SWITCHING	1N4148WS,75V,150mA,SOD-323,TP	1
0401-001099	D511	DIODE-SWITCHING	1N4148WS,75V,150mA,SOD-323,TP	1
0401-001099	D512	DIODE-SWITCHING	1N4148WS,75V,150mA,SOD-323,TP	1
0401-001099	D514	DIODE-SWITCHING	1N4148WS,75V,150mA,SOD-323,TP	1
0401-001099	D551	DIODE-SWITCHING	1N4148WS,75V,150mA,SOD-323,TP	1
0401-001099	D552	DIODE-SWITCHING	1N4148WS,75V,150mA,SOD-323,TP	1
0402-001097	D156	DIODE-SCHOTTKY	B140,40V,1000mA,DO-214AC,TP	1
0402-001192	D153	DIODE-RECTIFIER	ES2D,200V,2A,SMB,TP	1
0402-001192	D154	DIODE-RECTIFIER	ES2D,200V,2A,SMB,TP	1
0402-001192	D155	DIODE-RECTIFIER	ES2D,200V,2A,SMB,TP	1
0402-001298	BD151	DIODE-BRIDGE	DF06S,600V,1A,SMD-4,TP	1
0402-001427	D152	DIODE-RECTIFIER	ES1D,200V,1A,DO-214AC,TP	1
0402-001429	D151	DIODE-RECTIFIER	US1J,600V,1A,DO-214AC,TP	1
0403-001499	ZD051	DIODE-ZENER	MMSZ5252B,22.8/25.2V,500mW,SOD-123,TP	1
0403-001499	ZD401	DIODE-ZENER	MMSZ5252B,22.8/25.2V,500mW,SOD-123,TP	1
0404-001020	D109	DIODE-SCHOTTKY	BAT54C,30V,200mA,SOT-23,TP	1
0404-001020	D451	DIODE-SCHOTTKY	BAT54C,30V,200mA,SOT-23,TP	1
0404-001020	D452	DIODE-SCHOTTKY	BAT54C,30V,200mA,SOT-23,TP	1
0404-001020	D453	DIODE-SCHOTTKY	BAT54C,30V,200mA,SOT-23,TP	1
0404-001020	D454	DIODE-SCHOTTKY	BAT54C,30V,200mA,SOT-23,TP	1
0404-001020	D491	DIODE-SCHOTTKY	BAT54C,30V,200mA,SOT-23,TP	1
0404-001020	D492	DIODE-SCHOTTKY	BAT54C,30V,200mA,SOT-23,TP	1
0404-001020	D502	DIODE-SCHOTTKY	BAT54C,30V,200mA,SOT-23,TP	1
0406-001204	CD301	DIODE-TVS	SMBJ5.0CA,6.4/-/7.25V,600W,SMB	1
0406-001204	CD302	DIODE-TVS	SMBJ5.0CA,6.4/-/7.25V,600W,SMB	1
0406-001204	CD303	DIODE-TVS	SMBJ5.0CA,6.4/-/7.25V,600W,SMB	1
0407-000123	D611	DIODE-SWITCHING	DAN202K,80V,100mA,SOT-23,TP	1
0501-000463	Q651	TR-SMALL SIGNAL	KST2907A,PNP,350mW,SOT-23,TP,100-300	1
0501-000463	Q652	TR-SMALL SIGNAL	KST2907A,PNP,350mW,SOT-23,TP,100-300	1
0502-000245	IC156	TR-POWER	KSB1151-Y,PNP,1300mW,TO-126,160-320	1
0504-000127	Q902	TR-DIGITAL	FJV3102R,NPN,200mW,10K/10Kohm,SOT-23,TP	1

0506-000175	IC701	TR-ARRAY	2003,NPN,7,1W,SOP-16,ST,1000	1
0506-000175	IC801	TR-ARRAY	2003,NPN,7,1W,SOP-16,ST,1000	1
0601-002423	LED801	LED	SMD,RED,1.6 X 3.2mm,639nm,1.6 X 3.2mm	1
0601-002955	LED803	LED	SMD(REVERSE),YEL,1.6x1.5mm,588nm,3.2x1.6x1.1mm	1
0601-002956	LED501	LED	SMD(REVERSE),GRN,1.6x1.5mm,3.2x1.6x1.1mm	1
0601-002956	LED802	LED	SMD(REVERSE),GRN,1.6x1.5mm,3.2x1.6x1.1mm	1
0604-001172	IC152	PHOTO-COUPLER	TR,150-300,200mW,SOP,TP	1
0604-001172	IC155	PHOTO-COUPLER	TR,150-300,200mW,SOP,TP	1
0604-001172	IC351	PHOTO-COUPLER	TR,150-300,200mW,SOP,TP	1
0604-001172	IC352	PHOTO-COUPLER	TR,150-300,200mW,SOP,TP	1
0604-001172	IC505	PHOTO-COUPLER	TR,150-300,200mW,SOP,TP	1
0801-000393	IC302	IC-CMOS LOGIC	74HC86,OR GATE,SOP,14P,150MIL,QUAD,ST,-,2.0/6.0V,0.26V,-40to+85C,180mW,4.2V,1uA,	1
1006-001325	IC301	IC-BUS TRANSCEIVER	ISL81487LIBZ,SO,8P,4.9x3.8 mm,SINGLE,ST,PLASTIC,5V,-40to+85C,520mW,1,1,1.5/5.0V	1
1201-002946	IC451	IC-OP AMP	TSSOP,TR,14P,5x4.4x1.2mm,100,5.5V,-40to+85C,63dB,1,1nA,1nA,1.7mV	1
1202-000104	IC611	IC-VOLTAGE COMP.	393,SOP,8P,150MIL,DUAL,36V,CMOS,PLASTIC,18V,780mW,0to+70C,18V,5mV,250nA,50NA,30	1
1203-000002	IC157	IC-POSI.ADJUST REG.	431,TO-92,3P,-,PLASTIC,2.44/2.58V,775MV,0TO+70C,100MA,-,ST,-	1
1203-002735	IC153	IC-POSI.FIXED REG.	KIA7815API,TO-220IS,3P,10.3x15.3mm,PLASTIC,14.4/15.6V,2W,-30to+150,1A,ST	1
1203-005797	IC154	IC-DC/DC CONVERTER	SI-8008TMX-TL,TO263-5,5P,6.6x6.2x2.3mm,PLASTIC,0.8/24,1.65W,-	1
1203-006089	IC151	IC-PWM CONTROLLER	TOP253PN,DIP,7P,6.35x9.57mm,PLASTIC,-0.3V/700V,15W,-40Cto+150C,1.37A,ST	1
1404-001274	NTC151	THERMISTOR-NTC	22ohm,1.4A,3100K,9.5mW/C,-,7.0,-	1
1404-001498	PTC020	THERMISTOR-PTC	40ohm,25%,290Vac,7A,TR	1
1405-000154	VA002	VARISTOR	460Vdc,2500A,17.5x7.5mm,TP	1
1405-000154	VA003	VARISTOR	460Vdc,2500A,17.5x7.5mm,TP	1
1405-000160	VA001	VARISTOR	680V,4500A,17.5x6.5mm,TP	1
1405-000160	VA151	VARISTOR	680V,4500A,17.5x6.5mm,TP	1
2003-000855	R151	R-METAL OXIDE(S)	47Kohm,5%,3W,AA,TP,6x16mm	1
2007-000029	R166	R-CHIP	0ohm,5%,1/8W,TP,2012	1
2007-000043	R054	R-CHIP	1Kohm,1%,1/10W,TP,1608	1
2007-000052	R156	R-CHIP	10Kohm,1%,1/10W,TP,1608	1
2007-000052	R157	R-CHIP	10Kohm,1%,1/10W,TP,1608	1
2007-000066	R155	R-CHIP	20Kohm,1%,1/10W,TP,1608	1
2007-000066	R653	R-CHIP	20Kohm,1%,1/10W,TP,1608	1
2007-000070	R309	R-CHIP	0ohm,5%,1/10W,TP,1608	1
2007-000074	R053	R-CHIP	100ohm,5%,1/10W,TP,1608	1

2007-000074	R057	R-CHIP	100ohm, 5%, 1/10W, TP, 1608	1
2007-000074	R401	R-CHIP	100ohm, 5%, 1/10W, TP, 1608	1
2007-000074	R402	R-CHIP	100ohm, 5%, 1/10W, TP, 1608	1
2007-000074	R403	R-CHIP	100ohm, 5%, 1/10W, TP, 1608	1
2007-000074	R404	R-CHIP	100ohm, 5%, 1/10W, TP, 1608	1
2007-000074	R405	R-CHIP	100ohm, 5%, 1/10W, TP, 1608	1
2007-000074	R406	R-CHIP	100ohm, 5%, 1/10W, TP, 1608	1
2007-000074	R507	R-CHIP	100ohm, 5%, 1/10W, TP, 1608	1
2007-000076	R254	R-CHIP	330ohm, 5%, 1/10W, TP, 1608	1
2007-000076	R255	R-CHIP	330ohm, 5%, 1/10W, TP, 1608	1
2007-000076	R256	R-CHIP	330ohm, 5%, 1/10W, TP, 1608	1
2007-000076	R259	R-CHIP	330ohm, 5%, 1/10W, TP, 1608	1
2007-000076	R352	R-CHIP	330ohm, 5%, 1/10W, TP, 1608	1
2007-000076	R353	R-CHIP	330ohm, 5%, 1/10W, TP, 1608	1
2007-000076	R509	R-CHIP	330ohm, 5%, 1/10W, TP, 1608	1
2007-000076	R521	R-CHIP	330ohm, 5%, 1/10W, TP, 1608	1
2007-000077	R158	R-CHIP	470ohm, 5%, 1/10W, TP, 1608	1
2007-000077	R557	R-CHIP	470ohm, 5%, 1/10W, TP, 1608	1
2007-000077	R558	R-CHIP	470ohm, 5%, 1/10W, TP, 1608	1
2007-000078	R206	R-CHIP	1Kohm, 5%, 1/10W, TP, 1608	1
2007-000078	R303	R-CHIP	1Kohm, 5%, 1/10W, TP, 1608	1
2007-000078	R307	R-CHIP	1Kohm, 5%, 1/10W, TP, 1608	1
2007-000078	R308	R-CHIP	1Kohm, 5%, 1/10W, TP, 1608	1
2007-000078	R351	R-CHIP	1Kohm, 5%, 1/10W, TP, 1608	1
2007-000078	R354	R-CHIP	1Kohm, 5%, 1/10W, TP, 1608	1
2007-000078	R501	R-CHIP	1Kohm, 5%, 1/10W, TP, 1608	1
2007-000078	R505	R-CHIP	1Kohm, 5%, 1/10W, TP, 1608	1
2007-000078	R510	R-CHIP	1Kohm, 5%, 1/10W, TP, 1608	1
2007-000078	R511	R-CHIP	1Kohm, 5%, 1/10W, TP, 1608	1
2007-000078	R512	R-CHIP	1Kohm, 5%, 1/10W, TP, 1608	1
2007-000078	R515	R-CHIP	1Kohm, 5%, 1/10W, TP, 1608	1
2007-000080	R409	R-CHIP	2Kohm, 5%, 1/10W, TP, 1608	1
2007-000080	R504	R-CHIP	2Kohm, 5%, 1/10W, TP, 1608	1
2007-000080	R621	R-CHIP	2Kohm, 5%, 1/10W, TP, 1608	1
2007-000082	R052	R-CHIP	3.3Kohm, 5%, 1/10W, TP, 1608	1
2007-000084	R408	R-CHIP	4.7Kohm, 5%, 1/10W, TP, 1608	1
2007-000084	R551	R-CHIP	4.7Kohm, 5%, 1/10W, TP, 1608	1
2007-000084	R552	R-CHIP	4.7Kohm, 5%, 1/10W, TP, 1608	1
2007-000084	R553	R-CHIP	4.7Kohm, 5%, 1/10W, TP, 1608	1
2007-000084	R554	R-CHIP	4.7Kohm, 5%, 1/10W, TP, 1608	1
2007-000084	R555	R-CHIP	4.7Kohm, 5%, 1/10W, TP, 1608	1
2007-000084	R556	R-CHIP	4.7Kohm, 5%, 1/10W, TP, 1608	1
2007-000084	R559	R-CHIP	4.7Kohm, 5%, 1/10W, TP, 1608	1
2007-000084	R560	R-CHIP	4.7Kohm, 5%, 1/10W, TP, 1608	1
2007-000084	R561	R-CHIP	4.7Kohm, 5%, 1/10W, TP, 1608	1

2007-000683	R454	R-CHIP	3.3Kohm,1%,1/10W,TP,1608	1
2007-000683	R459	R-CHIP	3.3Kohm,1%,1/10W,TP,1608	1
2007-000683	R466	R-CHIP	3.3Kohm,1%,1/10W,TP,1608	1
2007-000708	R655	R-CHIP	3.9Kohm,1%,1/10W,TP,1608	1
2007-000842	R661	R-CHIP	3Kohm,1%,1/10W,TP,1608	1
2007-000842	R662	R-CHIP	3Kohm,1%,1/10W,TP,1608	1
2007-000924	R106	R-CHIP	470Kohm,1%,1/4W,TP,3216	1
2007-000924	R107	R-CHIP	470Kohm,1%,1/4W,TP,3216	1
2007-000924	R108	R-CHIP	470Kohm,1%,1/4W,TP,3216	1
2007-000924	R658	R-CHIP	470Kohm,1%,1/4W,TP,3216	1
2007-000924	R659	R-CHIP	470Kohm,1%,1/4W,TP,3216	1
2007-000924	R660	R-CHIP	470Kohm,1%,1/4W,TP,3216	1
2007-000929	R153	R-CHIP	470ohm,1%,1/10W,TP,1608	1
2007-000929	R154	R-CHIP	470ohm,1%,1/10W,TP,1608	1
2007-000939	R652	R-CHIP	47Kohm,1%,1/10W,TP,1608	1
2007-000962	R055	R-CHIP	5.1Kohm,1%,1/10W,TP,1608	1
2007-000962	R162	R-CHIP	5.1Kohm,1%,1/10W,TP,1608	1
2007-000979	R654	R-CHIP	5.6Kohm,1%,1/10W,TP,1608	1
2007-001067	R657	R-CHIP	6.8Kohm,1%,1/8W,TP,2012	1
2007-001068	R491	R-CHIP	6.8Kohm,1%,1/10W,TP,1608	1
2007-001071	R902	R-CHIP	6.8Kohm,5%,1/8W,TP,2012	1
2007-001074	R152	R-CHIP	6.8ohm,5%,1/8W,TP,2012	1
2007-001174	R104	R-CHIP	8.25Kohm,1%,1/4W,TP,3216	1
2007-001175	R056	R-CHIP	8.2Kohm,1%,1/10W,TP,1608	1
2007-001175	R410	R-CHIP	8.2Kohm,1%,1/10W,TP,1608	1
2007-002637	R611	R-CHIP	60.4Kohm,1%,1/4W,TP,3216	1
2007-002637	R612	R-CHIP	60.4Kohm,1%,1/4W,TP,3216	1
2007-002637	R613	R-CHIP	60.4Kohm,1%,1/4W,TP,3216	1
2007-002637	R615	R-CHIP	60.4Kohm,1%,1/4W,TP,3216	1
2007-002637	R617	R-CHIP	60.4Kohm,1%,1/4W,TP,3216	1
2007-002637	R618	R-CHIP	60.4Kohm,1%,1/4W,TP,3216	1
2007-007225	R161	R-CHIP	1.62Kohm,1%,1/10W,TP,1608	1
2007-007225	R455	R-CHIP	1.62Kohm,1%,1/10W,TP,1608	1
2007-007225	R457	R-CHIP	1.62Kohm,1%,1/10W,TP,1608	1
2007-007225	R468	R-CHIP	1.62Kohm,1%,1/10W,TP,1608	1
2007-007225	R492	R-CHIP	1.62Kohm,1%,1/10W,TP,1608	1
2007-008003	R513	R-CHIP	4.7Mohm,1%,1/10W,TP,1608	1
2007-010245	R062	R-CHIP	0.01ohm,1%,2W,TP,6432	1
2007-010245	R063	R-CHIP	0.01ohm,1%,2W,TP,6432	1
2007-010245	R451	R-CHIP	0.01ohm,1%,2W,TP,6432	1
2007-010245	R452	R-CHIP	0.01ohm,1%,2W,TP,6432	1
2007-010245	R453	R-CHIP	0.01ohm,1%,2W,TP,6432	1
2203-000236	C054	C-CER,CHIP	0.1nF,5%,50V,C0G,TP,1608	1
2203-000257	C053	C-CER,CHIP	10nF,10%,50V,X7R,TP,1608	1
2203-000257	C057	C-CER,CHIP	10nF,10%,50V,X7R,TP,1608	1
2203-000257	C301	C-CER,CHIP	10nF,10%,50V,X7R,TP,1608	1
2203-000257	C351	C-CER,CHIP	10nF,10%,50V,X7R,TP,1608	1
2203-000257	C352	C-CER,CHIP	10nF,10%,50V,X7R,TP,1608	1
2203-000257	C517	C-CER,CHIP	10nF,10%,50V,X7R,TP,1608	1
2203-000257	C518	C-CER,CHIP	10nF,10%,50V,X7R,TP,1608	1

2203-000257	C520	C-CER,CHIP	10nF,10%,50V,X7R,TP,1608	1
2203-000257	C611	C-CER,CHIP	10nF,10%,50V,X7R,TP,1608	1
2203-000257	C612	C-CER,CHIP	10nF,10%,50V,X7R,TP,1608	1
2203-000257	C613	C-CER,CHIP	10nF,10%,50V,X7R,TP,1608	1
2203-000257	C651	C-CER,CHIP	10nF,10%,50V,X7R,TP,1608	1
2203-000257	C904	C-CER,CHIP	10nF,10%,50V,X7R,TP,1608	1
2203-000257	C951	C-CER,CHIP	10nF,10%,50V,X7R,TP,1608	1
2203-000257	C952	C-CER,CHIP	10nF,10%,50V,X7R,TP,1608	1
2203-000257	C953	C-CER,CHIP	10nF,10%,50V,X7R,TP,1608	1
2203-000257	C954	C-CER,CHIP	10nF,10%,50V,X7R,TP,1608	1
2203-000440	C404	C-CER,CHIP	1nF,10%,50V,X7R,TP,1608	1
2203-000440	C406	C-CER,CHIP	1nF,10%,50V,X7R,TP,1608	1
2203-000440	C407	C-CER,CHIP	1nF,10%,50V,X7R,TP,1608	1
2203-000440	C409	C-CER,CHIP	1nF,10%,50V,X7R,TP,1608	1
2203-000440	C410	C-CER,CHIP	1nF,10%,50V,X7R,TP,1608	1
2203-000440	C411	C-CER,CHIP	1nF,10%,50V,X7R,TP,1608	1
2203-000440	C414	C-CER,CHIP	1nF,10%,50V,X7R,TP,1608	1
2203-000440	C501	C-CER,CHIP	1nF,10%,50V,X7R,TP,1608	1
2203-000440	C514	C-CER,CHIP	1nF,10%,50V,X7R,TP,1608	1
2203-000440	C515	C-CER,CHIP	1nF,10%,50V,X7R,TP,1608	1
2203-000440	C516	C-CER,CHIP	1nF,10%,50V,X7R,TP,1608	1
2203-000783	C455	C-CER,CHIP	0.33nF,5%,50V,C0G,1608	1
2203-000783	C458	C-CER,CHIP	0.33nF,5%,50V,C0G,1608	1
2203-002002	C453	C-CER,CHIP	0.033nF,5%,50V,NP0,TP,1608	1
2203-002002	C454	C-CER,CHIP	0.033nF,5%,50V,NP0,TP,1608	1
2203-002002	C459	C-CER,CHIP	0.033nF,5%,50V,NP0,TP,1608	1
2203-002002	C550	C-CER,CHIP	0.033nF,5%,50V,NP0,TP,1608	1
2203-002002	C551	C-CER,CHIP	0.033nF,5%,50V,NP0,TP,1608	1
2203-002002	C552	C-CER,CHIP	0.033nF,5%,50V,NP0,TP,1608	1
2203-002002	C553	C-CER,CHIP	0.033nF,5%,50V,NP0,TP,1608	1
2203-002002	C558	C-CER,CHIP	0.033nF,5%,50V,NP0,TP,1608	1
2203-002002	C559	C-CER,CHIP	0.033nF,5%,50V,NP0,TP,1608	1
2203-005249	C051	C-CER,CHIP	100nF,10%,50V,X7R,TP,1608	1
2203-005249	C052	C-CER,CHIP	100nF,10%,50V,X7R,TP,1608	1
2203-005249	C156	C-CER,CHIP	100nF,10%,50V,X7R,TP,1608	1
2203-005249	C157	C-CER,CHIP	100nF,10%,50V,X7R,TP,1608	1
2203-005249	C158	C-CER,CHIP	100nF,10%,50V,X7R,TP,1608	1
2203-005249	C159	C-CER,CHIP	100nF,10%,50V,X7R,TP,1608	1
2203-005249	C160	C-CER,CHIP	100nF,10%,50V,X7R,TP,1608	1
2203-005249	C161	C-CER,CHIP	100nF,10%,50V,X7R,TP,1608	1
2203-005249	C162	C-CER,CHIP	100nF,10%,50V,X7R,TP,1608	1
2203-005249	C163	C-CER,CHIP	100nF,10%,50V,X7R,TP,1608	1
2203-005249	C200	C-CER,CHIP	100nF,10%,50V,X7R,TP,1608	1
2203-005249	C202	C-CER,CHIP	100nF,10%,50V,X7R,TP,1608	1
2203-005249	C203	C-CER,CHIP	100nF,10%,50V,X7R,TP,1608	1
2203-005249	C204	C-CER,CHIP	100nF,10%,50V,X7R,TP,1608	1
2203-005249	C205	C-CER,CHIP	100nF,10%,50V,X7R,TP,1608	1
2203-005249	C206	C-CER,CHIP	100nF,10%,50V,X7R,TP,1608	1
2203-005249	C207	C-CER,CHIP	100nF,10%,50V,X7R,TP,1608	1
2203-005249	C208	C-CER,CHIP	100nF,10%,50V,X7R,TP,1608	1

2203-005249	C210	C-CER,CHIP	100nF,10%,50V,X7R,TP,1608	1
2203-005249	C211	C-CER,CHIP	100nF,10%,50V,X7R,TP,1608	1
2203-005249	C212	C-CER,CHIP	100nF,10%,50V,X7R,TP,1608	1
2203-005249	C230	C-CER,CHIP	100nF,10%,50V,X7R,TP,1608	1
2203-005249	C231	C-CER,CHIP	100nF,10%,50V,X7R,TP,1608	1
2203-005249	C232	C-CER,CHIP	100nF,10%,50V,X7R,TP,1608	1
2203-005249	C233	C-CER,CHIP	100nF,10%,50V,X7R,TP,1608	1
2203-005249	C251	C-CER,CHIP	100nF,10%,50V,X7R,TP,1608	1
2203-005249	C252	C-CER,CHIP	100nF,10%,50V,X7R,TP,1608	1
2203-005249	C253	C-CER,CHIP	100nF,10%,50V,X7R,TP,1608	1
2203-005249	C254	C-CER,CHIP	100nF,10%,50V,X7R,TP,1608	1
2203-005249	C302	C-CER,CHIP	100nF,10%,50V,X7R,TP,1608	1
2203-005249	C303	C-CER,CHIP	100nF,10%,50V,X7R,TP,1608	1
2203-005249	C304	C-CER,CHIP	100nF,10%,50V,X7R,TP,1608	1
2203-005249	C305	C-CER,CHIP	100nF,10%,50V,X7R,TP,1608	1
2203-005249	C306	C-CER,CHIP	100nF,10%,50V,X7R,TP,1608	1
2203-005249	C307	C-CER,CHIP	100nF,10%,50V,X7R,TP,1608	1
2203-005249	C401	C-CER,CHIP	100nF,10%,50V,X7R,TP,1608	1
2203-005249	C402	C-CER,CHIP	100nF,10%,50V,X7R,TP,1608	1
2203-005249	C403	C-CER,CHIP	100nF,10%,50V,X7R,TP,1608	1
2203-005249	C408	C-CER,CHIP	100nF,10%,50V,X7R,TP,1608	1
2203-005249	C460	C-CER,CHIP	100nF,10%,50V,X7R,TP,1608	1
2203-005249	C506	C-CER,CHIP	100nF,10%,50V,X7R,TP,1608	1
2203-005249	C507	C-CER,CHIP	100nF,10%,50V,X7R,TP,1608	1
2203-005249	C508	C-CER,CHIP	100nF,10%,50V,X7R,TP,1608	1
2203-005249	C509	C-CER,CHIP	100nF,10%,50V,X7R,TP,1608	1
2203-005249	C510	C-CER,CHIP	100nF,10%,50V,X7R,TP,1608	1
2203-005249	C511	C-CER,CHIP	100nF,10%,50V,X7R,TP,1608	1
2203-005249	C512	C-CER,CHIP	100nF,10%,50V,X7R,TP,1608	1
2203-005249	C614	C-CER,CHIP	100nF,10%,50V,X7R,TP,1608	1
2203-005249	C615	C-CER,CHIP	100nF,10%,50V,X7R,TP,1608	1
2203-005249	C701	C-CER,CHIP	100nF,10%,50V,X7R,TP,1608	1
2203-005249	C702	C-CER,CHIP	100nF,10%,50V,X7R,TP,1608	1
2203-005249	C801	C-CER,CHIP	100nF,10%,50V,X7R,TP,1608	1
2203-005249	C903	C-CER,CHIP	100nF,10%,50V,X7R,TP,1608	1
2203-006104	C902	C-CER,CHIP	1000nF,10%,50V,X7R,TP,3225,2.5T	1
2203-006348	C201	C-CER,CHIP	1000nF,10%,25V,X5R,TP,1608	1
2203-006348	C209	C-CER,CHIP	1000nF,10%,25V,X5R,TP,1608	1
2203-006348	C213	C-CER,CHIP	1000nF,10%,25V,X5R,TP,1608	1
2203-006348	C502	C-CER,CHIP	1000nF,10%,25V,X5R,TP,1608	1
2203-006348	C503	C-CER,CHIP	1000nF,10%,25V,X5R,TP,1608	1
2203-006348	C504	C-CER,CHIP	1000nF,10%,25V,X5R,TP,1608	1
2203-006348	C505	C-CER,CHIP	1000nF,10%,25V,X5R,TP,1608	1
2203-006348	C521	C-CER,CHIP	1000nF,10%,25V,X5R,TP,1608	1
2402-001183	CE451	C-AL,SMD	22UF,20%,16V,WT,TP,5.3X5.3X6MM	1
2402-001268	CE051	C-AL,SMD	100uF,20%,25V,WT,TP,8x6.3mm	1
2402-001268	CE405	C-AL,SMD	100uF,20%,25V,WT,TP,8x6.3mm	1
2402-001368	CE402	C-AL,SMD	47uF,20%,25V,TP,6.3x4.9mm	1
2402-001368	CE403	C-AL,SMD	47uF,20%,25V,TP,6.3x4.9mm	1
2402-001368	CE404	C-AL,SMD	47uF,20%,25V,TP,6.3x4.9mm	1

2404-001341	C219	C-TA,CHIP	10uF,20%,16V,SCS,TP,3216	1
2404-001341	C220	C-TA,CHIP	10uF,20%,16V,SCS,TP,3216	1
2703-003657	L152	INDUCTOR-SMD	3.3uH,20%,3030	1
2802-001165	X201	RESONATOR-CERAMIC	4MHz,0.5%,TP,4.5x2.0x1.15mm	1
2802-001211	X501	RESONATOR-CERAMIC	8MHZ,0.1%,TP,3.2X1.3X0.9 MM	1
DB13-00003A	Q901	IC DRIVER GATE	-,SOT-23,-,-,1P,1P,0.2mm,2.93x1.3mm	1
DB41-01010A	PCB	PCB MAIN-OUT	JUNGFRAU-PJT,FR-4,2,T1.6,142*195mm,1,OUT, SI-INVERTER,600V OVER	1
DB91-01173A	IC501	ASSY-MIC	JUNGFRAU OUTDOOR INV MICOM,STM-1040-OA, LM3S817, 48LQFP, ROM 64KB	1
DB09-00591A	IC201	IC MICOM	LM3S817,48,DC3V,50 MHz,LQFP,LQFP,LQFP,-40 ~ 85,64KB,LQFP	1
DB91-01178A	IC201	ASSY-MIC	Maldive Outdoor,STM-1042-OS, S3F4A1H, 100TQFP, RAM 512KB	1
DB09-00535A	IC501	IC MICOM	S3F4A1H,100P,DC5V,12 MHz,TQFP,16 Bit,16 Bit,TQFP,QFP,16 Bit,-40~+105,512K	1
DB93-11575A	-	ASSY PCB AUTO	MALDIVE-PJT,SSEC	1
2003-000855	R151	R-METAL OXIDE(S)	47Kohm,5%,3W,AA,TP,6x16mm	1
2201-000153	C004	C-CERAMIC,DISC	10nF,+80-20%,250V,Y5V,-,14.6x6mm,7.5	1
2201-000153	C005	C-CERAMIC,DISC	10nF,+80-20%,250V,Y5V,-,14.6x6mm,7.5	1
2201-000153	C012	C-CERAMIC,DISC	10nF,+80-20%,250V,Y5V,-,14.6x6mm,7.5	1
2201-000153	C013	C-CERAMIC,DISC	10nF,+80-20%,250V,Y5V,-,14.6x6mm,7.5	1
2201-000322	C151	C-CERAMIC,DISC	2.2nF,10%,2000V,Y5P,13x5mm,10mm	1
2201-000322	C152	C-CERAMIC,DISC	2.2nF,10%,2000V,Y5P,13x5mm,10mm	1
2201-000322	C901	C-CERAMIC,DISC	2.2nF,10%,2000V,Y5P,13x5mm,10mm	1
2201-000987	C153	C-CERAMIC,DISC	2.2nF,20%,400V,Y5U,TP,12.5x6mm,10mm	1
2201-000987	C154	C-CERAMIC,DISC	2.2nF,20%,400V,Y5U,TP,12.5x6mm,10mm	1
2201-002128	C061	C-CERAMIC,DISC	4.7nF,20%,400V,Y5U,15x7mm,10mm	1
2301-001577	C006	C-FILM,LEAD-PEF	1000nF,10%,275V,BK,26.5X21.5X12.5	1
2306-000123	C060	C-FILM,LEAD-PPF	100nF,5%,630V,BK,26x16.5x8.5mm	1
2306-000123	C400	C-FILM,LEAD-PPF	100nF,5%,630V,BK,26x16.5x8.5mm	1
2306-001033	C001	C-FILM,LEAD-PPF	330nF,10%,275V,TP,26x10x19.5,2	1
2401-000481	CE152	C-AL	10uF,20%,50V,WT,TP,5x11,5	1
2401-001548	CE159	C-AL	47uF,20%,25V,WT,TP,5x11,5	1
2401-001838	CE153	C-AL	470uF,20%,25V,WT,TP,10x16,5	1
2401-001838	CE154	C-AL	470uF,20%,25V,WT,TP,10x16,5	1
2401-001838	CE157	C-AL	470uF,20%,25V,WT,TP,10x16,5	1
2401-002438	CE902	C-AL	47uF,20%,50V,WT,TP,6.3x11,5mm	1
2401-003224	CE155	C-AL	470uF,20%,16V,WT,TP,8X11.5,5mm	1
2401-003224	CE156	C-AL	470uF,20%,16V,WT,TP,8X11.5,5mm	1
2401-003224	CE158	C-AL	470uF,20%,16V,WT,TP,8X11.5,5mm	1
2401-004267	CE151	C-AL	22uF,20%,500V,TP,16*25,7.5mm	1
2401-004874	CE101	C-AL	330uF,20%,400V,BK,25.4*50,10mm	1
2401-004874	CE102	C-AL	330uF,20%,400V,BK,25.4*50,10mm	1
2401-004874	CE103	C-AL	330uF,20%,400V,BK,25.4*50,10mm	1
2702-001110	L150	INDUCTOR-RADIAL	33uH,10%,9.5x16mm	1
3601-001538	F001	FUSE-AXIAL LEAD	250V,15A,TIME-LAG,CERAMIC,6.35x31.8mm	1
4715-001093	DSA	SURGE ABSORBER	3600V,20%,2000A,-,AXIAL	1
DB93-11568A	-	ASSY PCB MANUAL	SI-PJT,SSEC	1
0502-000245	IC156	TR-POWER	KSB1151-Y,PNP,1300mW,TO-126,160-320	1
1203-000002	IC157	IC-POSI.ADJUST REG.	431,TO-92,3P,-,PLASTIC,2.44/2.58V,775MV,0TO+70C,100MA,-,ST,-	1
1203-002735	IC153	IC-POSI.FIXED REG.	KIA7815API,TO-220IS,3P,10.3x15.3mm,PLASTIC,14.4/15.6V,2W,-30to+150,1A,ST	1
1203-006089	IC151	IC-PWM CONTROLLER	TOP253PN,DIP,7P,6.35x9.57mm,PLASTIC,-0.3V/700V,15W,-40Cto+150C,1.37A,ST	1
1404-001274	NTC151	THERMISTOR-NTC	22ohm,1.4A,3100K,9.5mW/C,-,7.0,-	1
1404-001498	PTC020	THERMISTOR-PTC	40ohm,25%,290Vac,7A,TR	1

1405-000154	VA002	VARISTOR	460Vdc,2500A,17.5x7.5mm,TP	1
1405-000154	VA003	VARISTOR	460Vdc,2500A,17.5x7.5mm,TP	1
1405-000160	VA001	VARISTOR	680V,4500A,17.5x6.5mm,TP	1
1405-000160	VA151	VARISTOR	680V,4500A,17.5x6.5mm,TP	1
3501-000273	RY021	RELAY-POWER	12V,540mW,16000mA,1FormA,20ms,6ms	1
3501-001163	RY022	RELAY-MINIATURE	12V,200mW,5000mA,1FormA,10ms,5ms	1
3501-001163	RY030	RELAY-MINIATURE	12V,200mW,5000mA,1FormA,10ms,5ms	1
3704-001601	IC202	SOCKET-IC	8P,SN,2.54mm	1
3711-000296	CN901	HEADER-BOARD TO CABLE	1WALL,6P,1R,3.96MM,STRAIGHT,SN,WHT	1
3711-000796	CN301	HEADER-BOARD TO CABLE	BOX,2P,1R,2.5MM,STRAIGHT,SN,RED	1
3711-001031	CN701	HEADER-BOARD TO CABLE	BOX,6P,1R,2.5MM,ANGLE,SN,WHT	1
3711-001036	CN251	HEADER-BOARD TO CABLE	BOX,6P,1R,2.5mm,STRAIGHT,SN,BLU	1
3711-003380	CN030	HEADER-BOARD TO CABLE	1WALL,2P,1R,7.92MM,ANGLE,SN,WHT	1
3711-004067	CN851	HEADER-BOARD TO CABLE	BOX,4P,1R,2mm,ANGLE,SN,NTR	1
3711-007656	CN451	HEADER-BOARD TO CABLE	BOX,3,1R,6mm,STRAIGHT,WHT	1
3711-007659	CN051	HEADER-BOARD TO CABLE	2,1R,7.92mm,STRAIGHT,WHT	1
3711-007717	CN551	HEADER-BOARD TO CABLE	BOX,10P,1R,2mm,ANGLE,SN,RED	1
3711-007718	CN201	HEADER-BOARD TO CABLE	BOX,10P,1R,2mm,ANGLE,SN,BLK	1
3712-001139	CN001	CONNECTOR-	TAB,MALE,6.35x0.8mm	1
3712-001139	CN002	CONNECTOR-	TAB,MALE,6.35x0.8mm	1
3712-001139	CN003	CONNECTOR-	TAB,MALE,6.35x0.8mm	1
4719-002483	PFC050	POWER MODULE	Smart Power Module,FPAB20BH60B,600V,20A,89W,20kHz ,PFCM	1
4719-002484	IPM400	POWER MODULE	Smart Power Module,FNA41560B2,600V,15A,41W,20kHz	1
DB26-00120A	PT150	TRANS SWITCHING	EE2525,TOP253PN(SI-INV),220V,EE2525,18.6V, 12V, 6V,EE2525,50/60Hz,1.32mH,18.6V, 12V, 6V,SI-INVERTER, 12W	1
DB27-00070A	FT301	COIL CHOKE	CV005180SJ,JSF2,18.0,+50~-30%,430mohm,14*16*10,8.4/3.4,4.0,-25~+60	1
DB27-00077A	FT001	COIL FILTER	MALDIVE,12mH,22m,15A	1
DB61-04692A	IPM/PFCM UNDER	SUPPORT-PBA	SI Inv(MALDIVES1 12k),PA66-FR(40),1.5,109,26.8,4.5,5V,4.5g,BLACK	1
DB67-00942A	VA001_1	CAP	VIVALDI-P/J,SHP2,-,-,-,GREEN,SSEC	1
DB67-00942A	VA002_1	CAP	VIVALDI-P/J,SHP2,-,-,-,GREEN,SSEC	1
DB67-00942A	VA003_1	CAP	VIVALDI-P/J,SHP2,-,-,-,GREEN,SSEC	1
DB67-00942A	VA151_1	CAP	VIVALDI-P/J,SHP2,-,-,-,GREEN,SSEC	1

DB91-01173A	IC501	ASSY-MIC	JUNGFRAU OUTDOOR INV MICOM,STM-1040-0A, LM3S817, 48LQFP, ROM	1
DB91-01178A	IC201	ASSY-MIC	Maldive Outdoor,STM-1042-0S, S3F4A1H, 100TQFP, RAM 512KB	1

9. Circuit Descriptions

9-1 PCB Circuit Descriptions

9-1-1 Indoor Unit

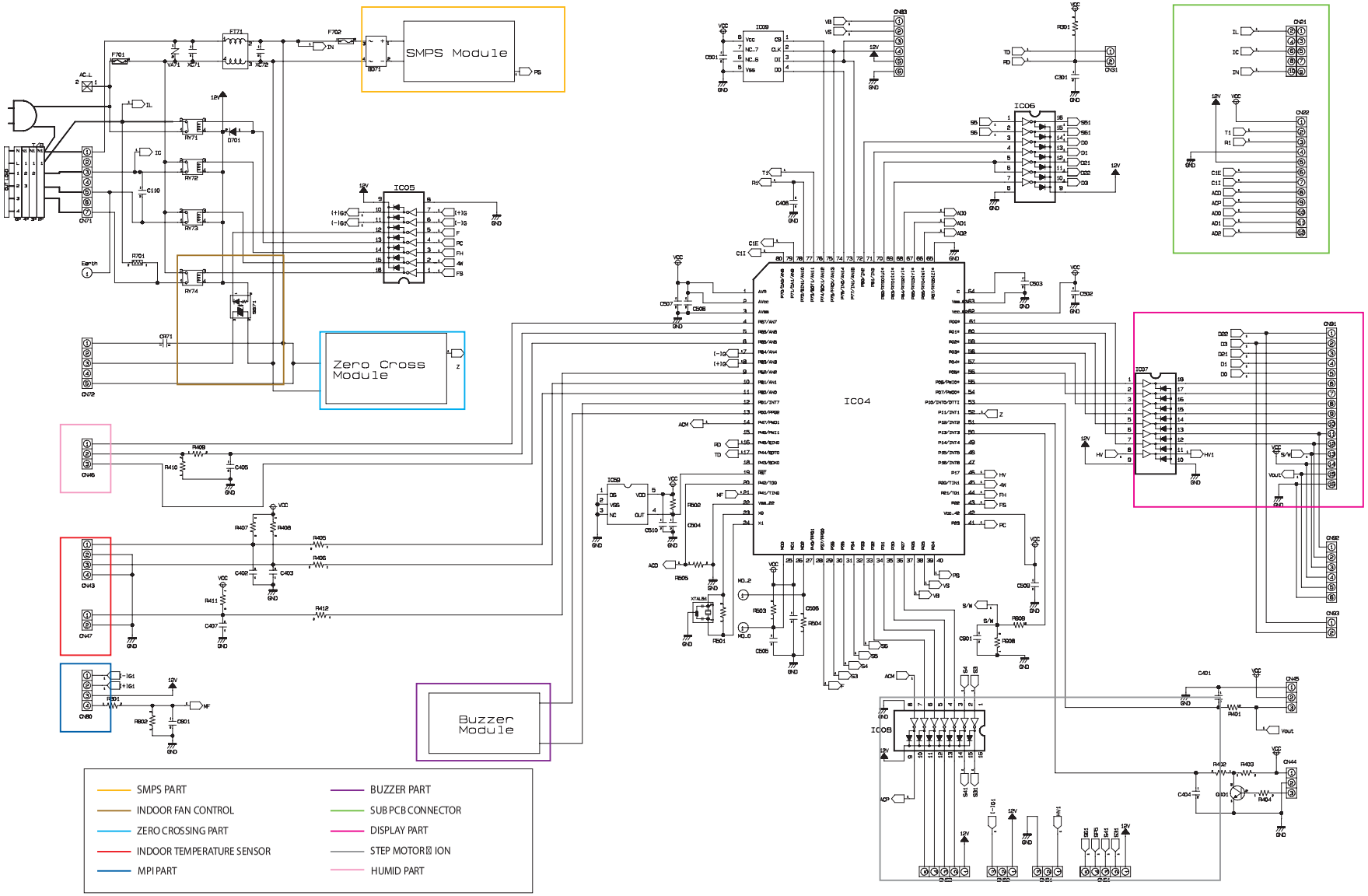

This Document can not be used without Samsung's authorization.

Circuit Descriptions

9-1-2 Outdoor Unit

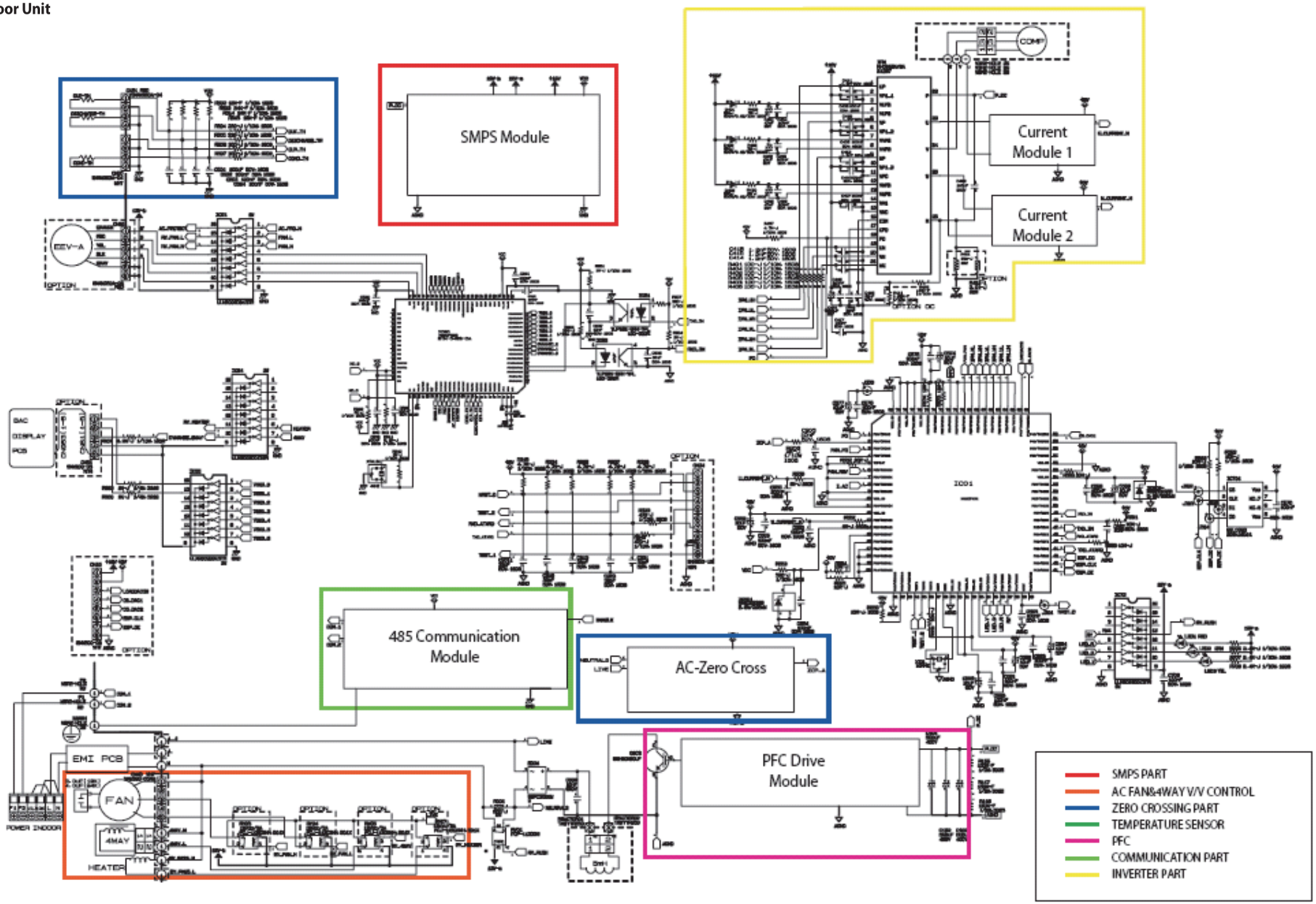

This Document can not be used without Samsung's authorization.

9-2 Refrigerating Cycle Diagram

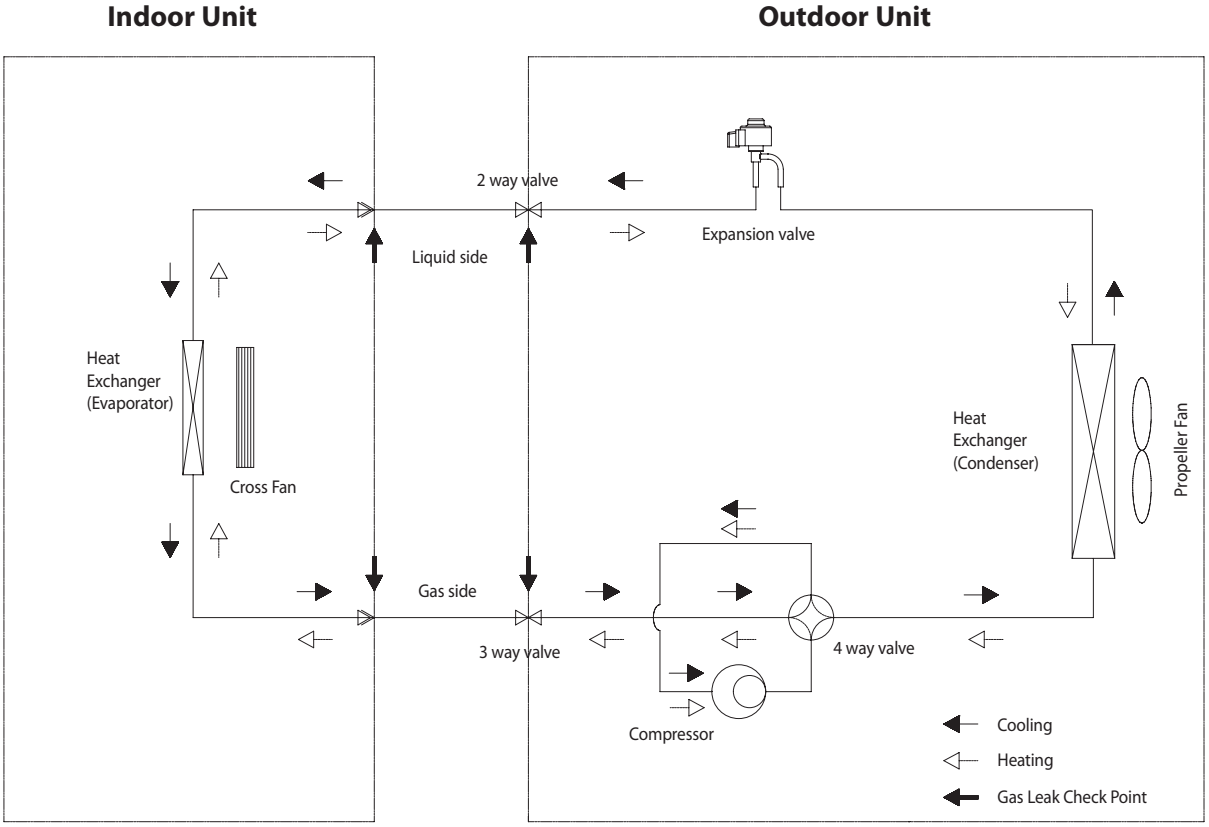

11. Operating Instructions

11-1 Name of Each Part

11-1-1 Indoor Unit

The design and shape are subject to change according to the model.

Main parts

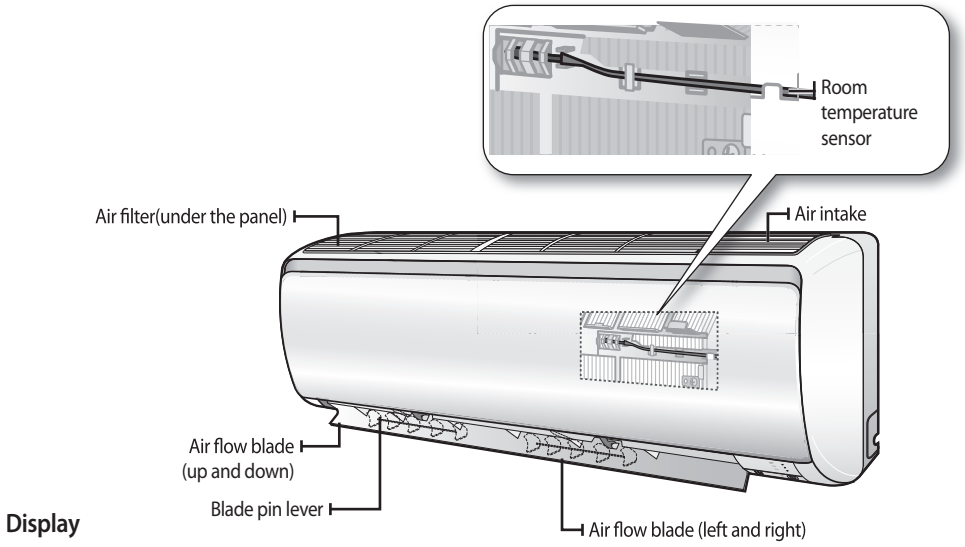

Display

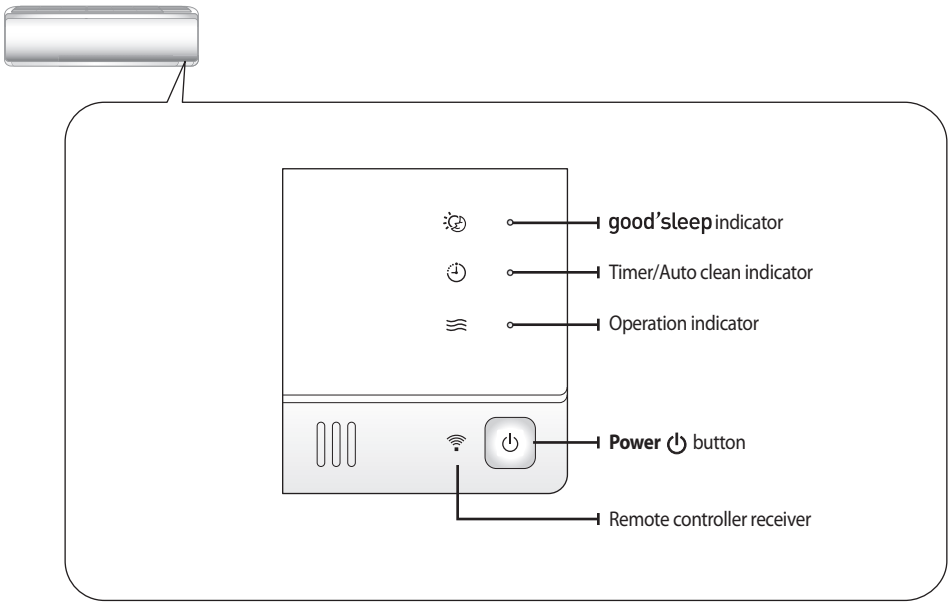

11-1-2 Outdoor Unit

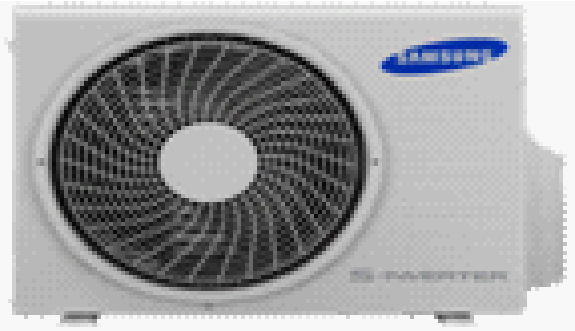

AQVP*AX**

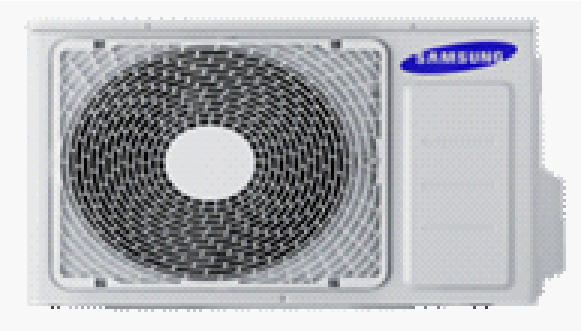

AQVPSBX***

11-2 Wireless Remote Control-Buttons and Display

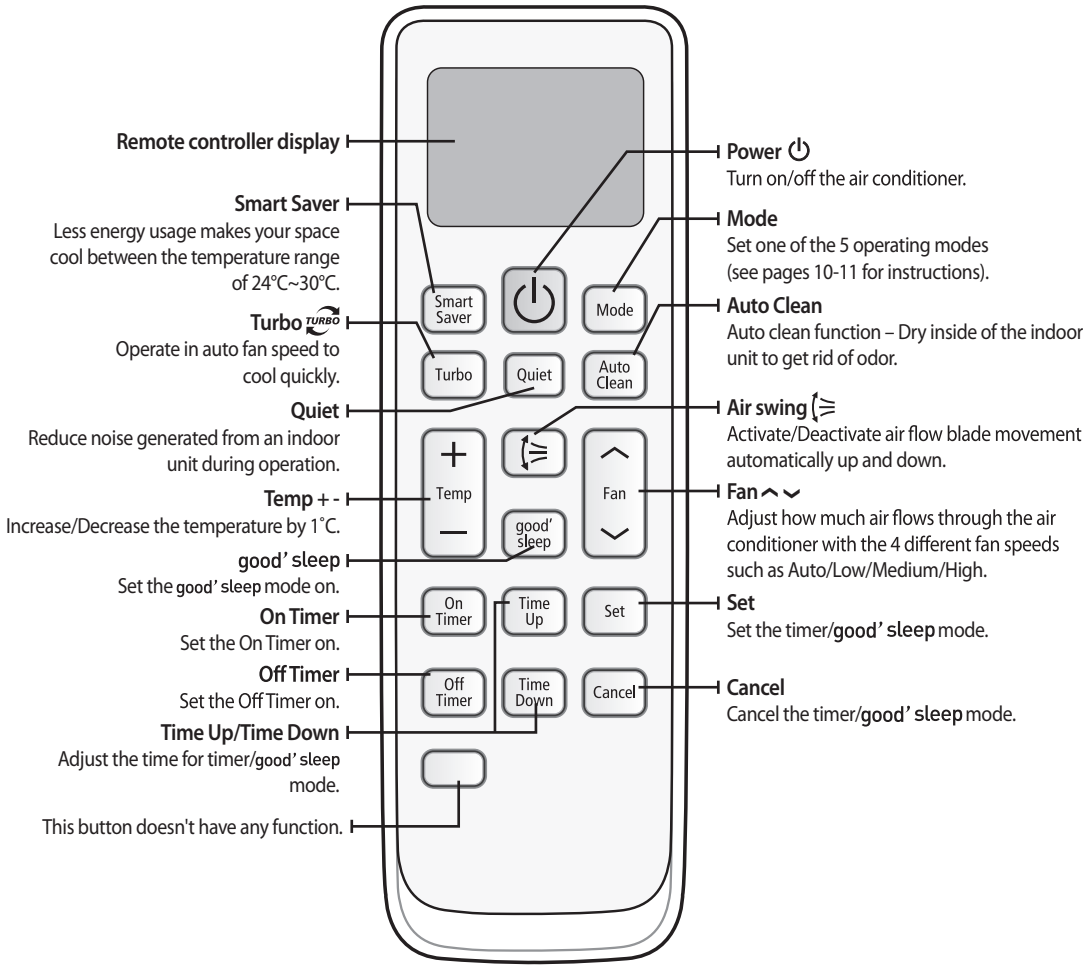

14. Reference Sheet

14-1 Index for Model Name

✳ Project model code for overseas from 2007(For RAC Export Models)

Model Code

A	S	V	1	8	H	B	A	X
(1)	(2)	(3)	(4)	(5)	(6)	(7)	(8)	(9)

Ex.) Maldives (Grille – White) Heat Pump12k Btu/h Model Indoor Unit

A Q V 1 2 P W A N

(1), (2) Product Division	
AS	Cooling Only
AQ	Heat Pump

(3) Inverter	
V	Inverter
None	Non Inverter

(4), (5) Capacity	
09	9,000 Btu
12	12,000 Btu
18	18,000 Btu
24	24,000 Btu

(6) Project	
A	Mont Blanc (Premium)
B	Crystal – Temporary
C	Max(including Smart) – Temporary
D	Mont Blanc (Deluxe)
E	Crystal (Vivaldi Deluxe)
F	Forte
G	GP
H	HB
J	WW Premium
K	Jungfrau-PRM
L	Forte Deluxe
M	Moderato
N	Neo Forte
P	Maldives
R	Max Smart (Vivaldi Std)
S	Forte Smart (SSEC)
T	Boracay
U	Max (Vivaldi Standard)
V	Vivace
W	WW
X	Forte Smart (TSE)
Y	Jungfrau-DLX

(7) Grille Color	
B	Black
S	Silver
W	White
F	La Fleur
U	Blue
G	Grey

(8) Version	
A-K	SSEC
L-S	TSE

(9) Unit	
N	Indoor Unit
X	Outdoor unit

● Except the RAC Export Models for China.

14-2 Low Refrigerant Pressure Distribution

Note : • Please measure the refrigerant pressure after the air conditioner operates on testing cooling mode during more than 10 minutes.

☐Indoor Temp. Variation : 20°C ~ 32°C
☐Outdoor Temp. Variation : -5°C ~ 45°C

Low Refrigeran t Pressur e Distributio n

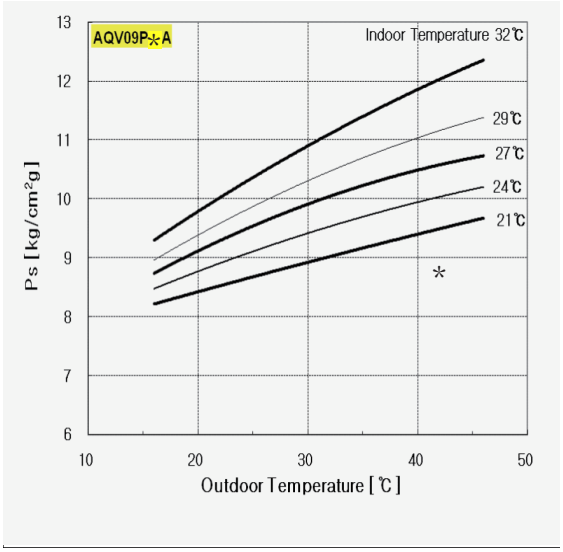

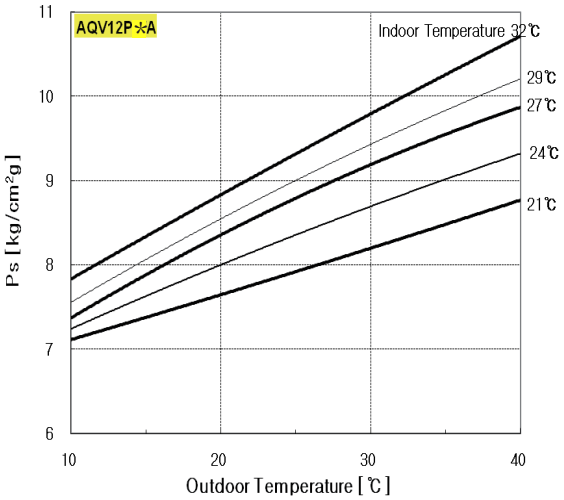

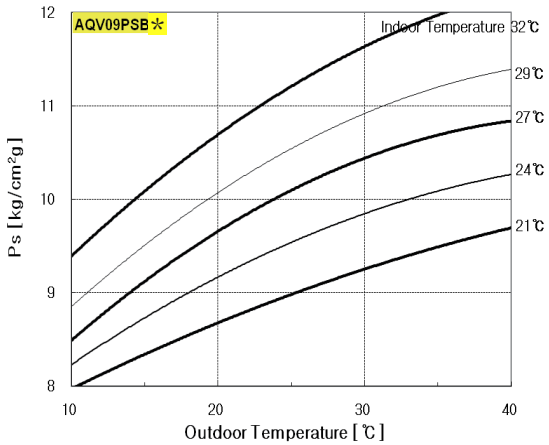

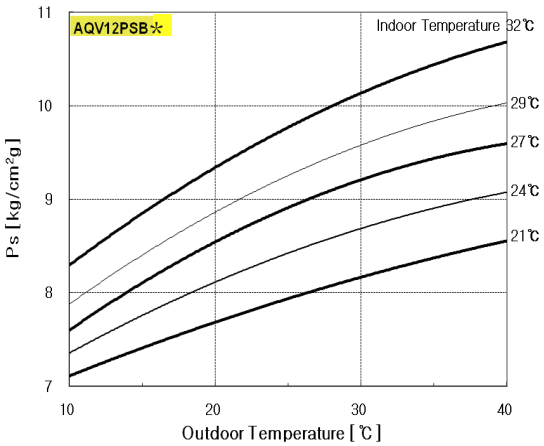

Outdoor Temperature[℃]

14-3 Pressure & Capacity mark

■ Power/Heat

W	cal/s	kcal/h	Btu/h	HP	kg·m/s	lb·m/s
1	0.23885	0.85985	3.4121	0.001341	0.10197	0.73756
4.1868	1	3.6	14.286	0.0056146	0.42693	3.088
1.163	0.27778	1	3.9683	0.0015596	0.11859	0.85778
0.29307	0.06999	0.252	1	3.9302×10^{-4}	0.029885	0.21616
745.7	178.11	641.19	2,544.4	1	76.04	550
9.8067	2.3423	8.4322	33.462	0.013151	1	7.233
1.3558	0.32383	1.1658	4.6262	0.0018182	0.13826	1

14-4 Q & A for Non-trouble

Classification	Class	Description
Cooling	Q	**The cooling is weak.**
	A	When it is hot outside, its cooling capacity decreases due to the increase of the ambient temperature. When the dust filter gets blocked or warm outside air gets in, the cooling capacity will decrease. So, make sure to clean the dust filter frequently, prevent heat loss by closing the doors and insulate the cooling area by using curtains, blinds, shades or window tinting.
	Q	**The cooling is good generally. But, it gets weak when it is considerably hot.**
	A	It occurs when the outdoor unit is exposed to direct sun light and heat-up air is not ventilated well.So, set up a sunblind over the outdoor unit and keep stuff away from the unit to increase the ventilation. When the cooling capacity decreases during a heat wave, clean the heat exchanger of the outdoor unit or spray some cold water to the heat exchanger to increase the cooling capability.
	Q	**The cooling is weak. Does it need refrigerant charging?**
	A	It is not correct charging refrigerant regularly. Except that you have moved in several times or the connection pipes are broken, the refrigerant does not run low. So, when refrigerant is additionally charged, it could be costly and cause a product's failure. When the refrigerant leaks, all of it will escape in a short time resulting in cooling failure and no water coming out of the drain hose. So, if water comes out from the drain hose, it indicates the normal operation of the product and it does not need refrigerant charging.
	Q	**It fails to do cooling.**
	A	When the air conditioner is set to Ventilation or the desired temperature is set higher than the current temperature, it fails to do cooling. In this case, select Cooling or set the desired temperature lower.
Leakage	Q	**It floods the floor.**
	A	Place the drain hose properly. When it is not placed properly, the drain water would flow back flooding the floor. So, straighten out the drain hose for the water to be drained well.
	Q	**Water drips at the drain connection (service valve) of the outdoor unit.**
	A	When a glass bottle is taken out of the refrigerator, moisture gets condensed on its surface due to the temperature differences. The same principle applies to the air conditioner. When cold refrigerant goes through the copper tube, moisture gets condensed on the surface of the tube and the connection areas. To prevent the water condensation, the pipes are insulated. But, the connection areas of the outdoor unit are not insulated for the purpose of maintenance or repair, and water gets condensed due to the temperature differences and drips down. Generally, it evaporates right away. But, when it drips much during muggy days, put a water pan on the floor.
	Q	**It leaks even though a drain pump is used.**
	A	It occurs when the drain pump is plugged out or it is out of order. Check the power of the drain pump and the position of the drain hose, and when the pump is faulty, contact the drain pump manufacturer. Samsung Electronics do not manufacture drain pumps. So, we are not able to correct the drain pump problems.
Smells	Q	**Whenever the air conditioner is turned on, it irritates my eyes and gives me a headache.**
	A	There are no components in the air conditioner irritating the eyes and sending out chemical smells. But, when the air conditioner is turned on, other smell sources are sucked into the air conditioner and get out of it. So, find and root out the smell sources. Generally, it occurs at a interior renovated place, a pharmacy, a gasoline handling place, a tire shop, a second-hand book shop or an electronic component handling place; when its chemical or musty smells are sucked in and sent out, it can be misled that the air conditioner generates them. So, find and root out the problem or refresh the room frequently.

Classification	Class	Description
Smells	Q	**Whenever the air conditioner is turned on, it stinks.**
	A	There are no components in the air conditioner sending out chemical smells. But, when the air conditioner is turned on, other smell sources are sucked into the air conditioner and get out of it. So, find and root out the smell sources. Generally, when the drain hose is taken out to the washing room or there are sources of smells such as a diaper bin, a shoe shelf or a socks bin, bad smells generate. Also, it occurs where glass cleaners or air fresheners are used; when they are sucked in interacting with dusts and moistures inside, bad smells generate. These kinds of organic materials noxious to human bodies. So, we recommend against the use of them.
	Q	**Whenever the air conditioner is turned on, it smells sour.**
	A	When the room is papered recently, its paste smells would be sucked inside. Also, when the air conditioner is installed in the study room of young boys loving sweat-generating activities such as the basketball, excessive sweats evaporate and get sucked into the air conditioner resulting in bad smells. So, find and root out the problem or refresh the room frequently.
	Q	**Whenever the air conditioner is turned on, it smells musty.**
	A	It is due to the improper keeping of the product after its use. When keeping the product, dry up the inside with the operation of Ventilation to prevent must. When the product is kept without drying up the inside with Ventilation, mold would grow inside resulting in must. So, open the windows and switch on the Ventilation function to get rid of the saturated smell inside.
	Q	**Whenever the air conditioner is turned on, it sends out bad smells such as stale smells.**
	A	It occurs generally when there are pet animals in the house. Their smells stay at the same place. But, when the air conditioner is turned on, the air gets circulated resulting in the circulation of the smells. So, find and root out the problem or refresh the room frequently.
	Q	**It sends out bad smells.**
	A	When the air filter is filthy, it could send out bad smells. So, clean the filter and ventilate the room with the windows open while operating the Ventilation function.
Operation	Q	**It won't start.**
	A	There is a power failure or it is plugged out. Also, check if the power distribution panel is switched off.
	Q	**It goes off during operation.**
	A	When the hot air does not escape properly, it goes off during operation. It occurs when it does not ventilate properly because the outdoor unit is covered, the back of the outdoor unit is blocked by a cardboard or a plywood panel, and the front of the outdoor unit is blocked by the closed window or other obstacles. Clear the above obstacles from the outdoor unit.
	Q	**It generally works properly. But, when it's considerably hot, it goes off during operation.**
	A	It occurs when the outdoor unit is exposed to direct sunlight and the hot air does not escape properly. Set up a sun blind over the outdoor unit and clear the neighboring obstacles from the outdoor unit to provide good ventilation. When it goes off frequently during a heat wave, it would prevent the turn-off and increase the cooling capacity cleaning the outdoor unit or spraying some water to the heat exchanger.
	Q	**The remote controller won't operate.**
	A	When the batteries run out or the transmitter or receiver of the remote controller is blocked by obstacles, change the batteries or keep the obstacles away from the controlling area. Also, the remote controller may not work under intensive light from a 3-wave length lamp or a neon sign due to the EMI. In this case, take the remote controller closer to the receiver.

Classification	Class	Description
Installation	**Q**	**Who installs the air conditioner? (Relocation/Re-installation)**
	A	When relocating or re-installing the air conditioner, make sure to contact Samsung Electronics Service Center or Authorized Service Agent and have them to do the job. (If not, it could cause personal injury or product damage.) The cost for the relocation/re-installation of the air conditioner is subject to the customer's expense. There is a cost table. But, our service engineer needs to visit to total up the cost correctly. When you move in, make sure to contact Samsung Electronics Service Center or Authorized Service Agent in advance to streamline the process.
	Q	**Is it possible to install the outdoor unit outside?**
	A	It is possible to install it at a designated place in the apartment or on the rooftop nearby. But, it's illegal hanging an angle iron case with the outdoor unit in it outside the apartment. Also, it is illegal obstructing passers-by with the outdoor unit installed outside.
	Q	**What can be done to install the outdoor unit facing the road because it is a commercial building?**
	A	The following is an excerpt from Building Code going into effect from JUNE 1st 2005. "The exhaust pipe of a cooling or ventilation facility installed in a building adjacent to the streets of commercial or residential areas shall be installed higher than 2 m to prevent the exhaust air from blowing directly to passers-by and the current facilities shall be corrected by MAY 31st 2005." So, please install it higher than 2 m or not to blow the hot exhausting air directly to passers-by.
	Q	**What about installing a windscreen during installation not to blow hot air directly to passers-by?**
	A	When the hot air from the front of the outdoor unit is blocked, the product's performance will be affected and it will fail to operate properly. So, keep it at least 300mm away from its surrounding walls and give it good ventilation.

14-5 Cleaning/Filter Change

14-5-1 Cleaning your Air Conditioner

To get the best possible use out of your air conditioner, you must clean it regularly to remove the dust that accumulates on the air filter.

• Before cleaning your air conditioner, ensure that you have switched off the breaker used for the unit.

Opening the panel

Tightly grab top of the front panel and pull it down to open.
Then slightly lift the panel up.

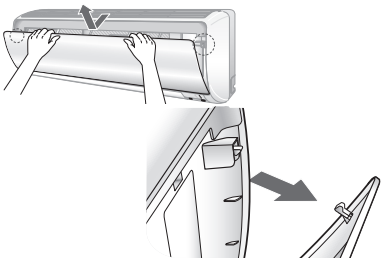

Removing the Air filter

Grab the handle and lift it up. Then, pull the Air filter towards you and slide it down.

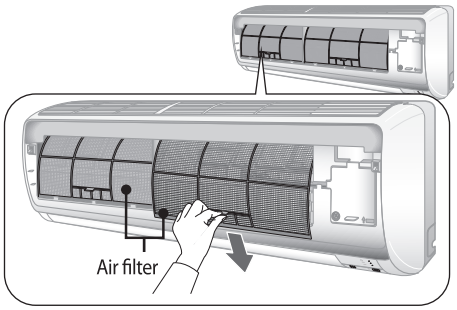

Cleaning the air filter

Washable foam based air filter captures large particles from the air. The filter is cleaned with a vacuum or by hand washing.

Open the panel and put the Air filter out.

Clean the Air filter with a vacuum cleaner or soft brush. If dust is too heavy, rinse it with running water.

Dry the Air filter in a ventilated area.

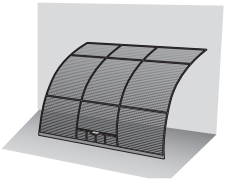

Insert the Air filter back in its original position and close the front panel.

NOTE

- Clean the Air filter every 2 weeks or when the filter clean reminder lights up. Cleaning term may differ depending on the usage and environmental conditions. In dusty area, clean it once a week.
- If you turn off the air conditioner by pressing **Power** ⏻ button, the filter clean reminder will be turned off.
- If the Air filter dries in a confined (or humid) area, odors may generate. If it occurs, re-clean and dry it in a well-ventilated area.

14-5-2 Cleaning Deodorizing and Bio filter (Option)

To remove minute dust particles and odors, deodorizing and Bio filter are installed in the air conditioner.
You should clean the filters every 3 months.

1. Open the upper front grille by pulling the lower right and left tabs of the grille.
2. Pull out the deodorizing and Bio filter.
3. Wash the filters with clean water, then dry them in the shade.
4. Insert the filters into the original position.
   Note : • You can change the position of filters with each other.
5. Close the front grille.

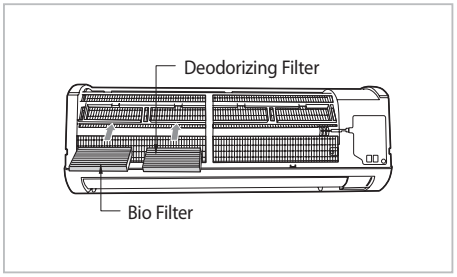

14-6 Installation

14-6-1 Before Installation

Keep the air conditioner outlet and inlet free from its surroundings.
In case of installation, keep the symmetry and fix it to prevent vibration.
The pipe length shall meet the standard as far as possible.

14-6-2 Installation Procedure

■ Location

Install the product in an area to guarantee the best cooling effect, convenience of piping and electric work, and inexistence of vibration or wind.

■ Wall Drilling

Drill the wall downward in a diameter of 60 to 65mm.

■ Fixing Indoor Unit & Outdoor Unit

Fix the air conditioner indoor unit securely to the wall. Secure the outdoor unit in a suitable position.

■ Pipe Spooling & Connecting

You shall cut the pipe with a pipe cutter and grind all the burrs of the cut surface.
Pipe expansion may continue until the pipe surface becomes uneven or torn apart.
Be sure to use a torque wrench to tighten pipes or flare nuts.

<Torque & Depth>

Outer Diameter(D)	Torque(kgf·cm)	Depth(A)
6.35mm(1/4")	140~170	1.3mm
9.52mm(3/8")	250~280	1.8mm
12.70mm(1/2")	380~420	2.0mm
15.88mm(5/8")	440~480	2.2mm
19.05mm(3/4")	990~1,210	2.2mm

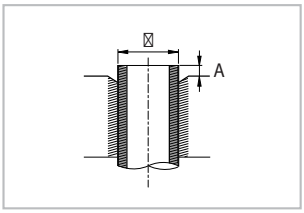

■ Leak Test

Put an inert gas like nitrogen in the outdoor unit pipe and put soap bubbles or other test liquids on the pipe surface for the leak test.

■ Drain Hose Connecting

Install the drain hose downward to drain water naturally. Be sure to pour water into the hose to check if it drains well.

■ Electric & Earth Work

Electric and earth work shall meet the "Electric Facility Technology Standard" and the "Internal Wire Regulation" of the Electric Business Laws.

■ Inspection & Trial Run

Upon completion of the tests, you shall make a trial run while you explain the main functions of the air conditioner to finish the installation.

14-7 Installation Diagram of Indoor Unit and Outdoor Unit

14-7-1 Air-Purge Procedure

1) Connect each assembly pipe to the appropriate valve on the outdoor unit and tighten the flare nut.

2) Connect the charging hose of low pressure side of manifold gauge to the packed valve having a service port as shown at the figure.

3) Open the valve of the low pressure side of manifold gauge counter-clockwise.

4) Purge the air from the system using vacuum pump for about 30 minutes.
   - Make sure that pressure gauge show -0.1MPa(-76cmHg) after about 30 minutes.
   - This procedure is very important in order to avoid gas leak.
   - Turn off the vacuum pump.
   - Close the valve of the low pressure side of manifold gauge clockwise.
   - Remove the hose of the low pressure side of manifold gauge.

5) Set valve cork of both liquid side and gas side of packed valve to the open position.

6) Mount the valve stem nuts and the service port cap to the valve, and tighten them at the torque of 183kgf•cm with a torque wrench.

7) Check for gas leakage.
   - At this time, especially check for gas leakage from the 3 way valve's stem nuts, and from the service port cap.

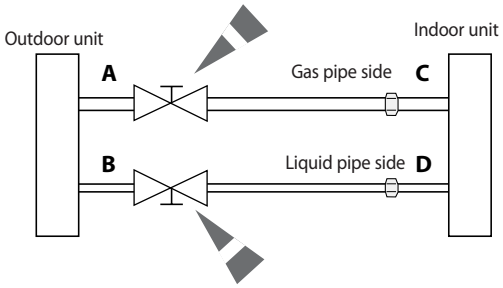

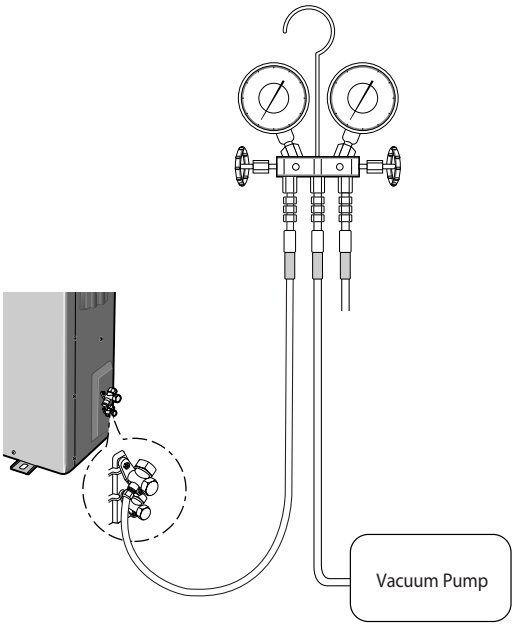

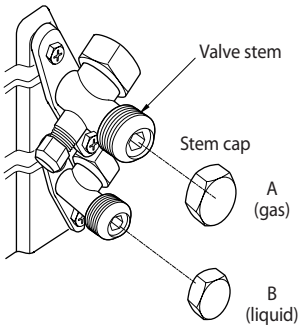

14-7-2 “Pump down” Procedure

Pump down will be carried out when an evaporator is replaced or when the unit is relocated in another area.

1) Remove the caps from the 3 way valve and the 3-Way valve.

2) Turn the 3-Way valve clockwise to close and connect a pressure gauge (low pressure side) to the service valve, and open the 3 way valve again.

3) Set the unit to cool operation mode. (Check if the compressor is operating.)

4) Turn the 3-Way valve clockwise to close.

5) When the pressure gauge indicates "0" turn the 3-Way valve clockwise to close.

6) Stop operation of the air conditioner.

7) Close the cap of each valve.

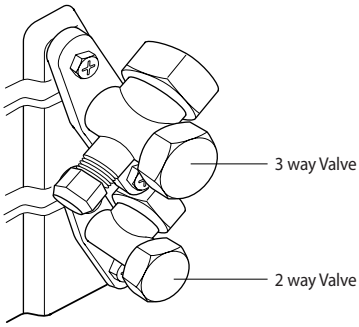

Remarks

Relocation of the air conditioner

- Refer to this procedure when the unit is relocated.
- Carry out the pump down procedure (refer to the details of 'pump down').
- Remove the power cord.
- Disconnect the assembly cable from the indoor and outdoor units.
- Remove the flare nut connecting the indoor unit and the pipe.
- At this time, cover the pipe of the indoor unit and the other pipe using a cap or vinyl plug to avoid foreign material entering.
- Disconnect the pipe connected to the outdoor unit.
  At this time, cover the valve of the outdoor unit and the other pipe using a cap or vinyl plug to avoid foreign material entering.
- Make sure you do not bend the connection pipes in the middle and store together with the cables.
- Move the indoor and outdoor units to a new location.
- Remove the mounting plate for the indoor unit and move it to a new location.

15-1. POWER SUPPLY

Working Voltage	198V ~ 264V
Voltage Imbalance	Within a 3% Deviation from Each Voltage at the Main Terminal of Outdoor Unit
Starting Voltage	Higher than 85% of the Rated Voltage

15-2. WORKING RANGE

15-2-1. MULTIZONE/MONOZONE/SUMMIT

Applicable models:

MULTIZONE	MONOZONE	SUMMIT		
RAM-40QH5	RAC-25NH5	RAC-25WX8	RAC-25YH5	RAC-18YH6
RAM-55QH5	RAC-35NH5	RAC-35WX8	RAC-35YH5	RAC-25YH6
RAM-65QH5	RAC-50NH5	RAC-50WX8	RAC-50YH6	RAC-35YH6
RAM-72HQ5	RAC-65NH5	RAC-25FX8	RAC-60YH5	RAC-50DH7
RAM-90QH5		RAC-35FX8	RAC-70YH5	RAC-60DH7
RAM-130QH5		RAC-50FX8	RAC-80YH5	RAC-70DH7

The temperature range is indicated in the following table.

Cooling

working range	min (°C)	max (°C)	rated (°C)
outdoor	-10	43	35
indoor	16	32	27

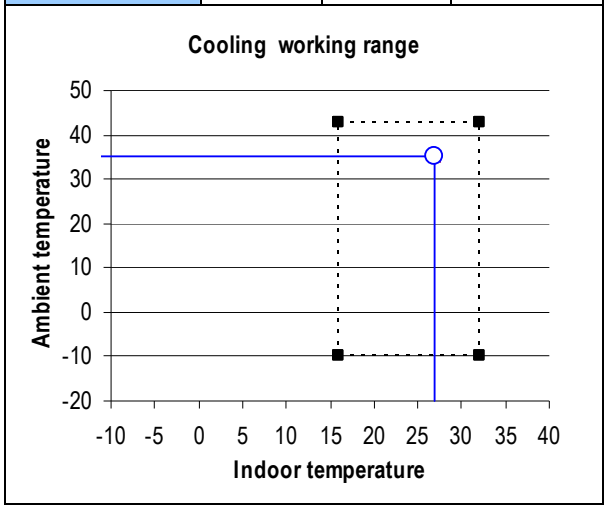

Heating

working range	min (°C)	max (°C)	rated (°C)
outdoor	-15	21	7
indoor	16	27	20

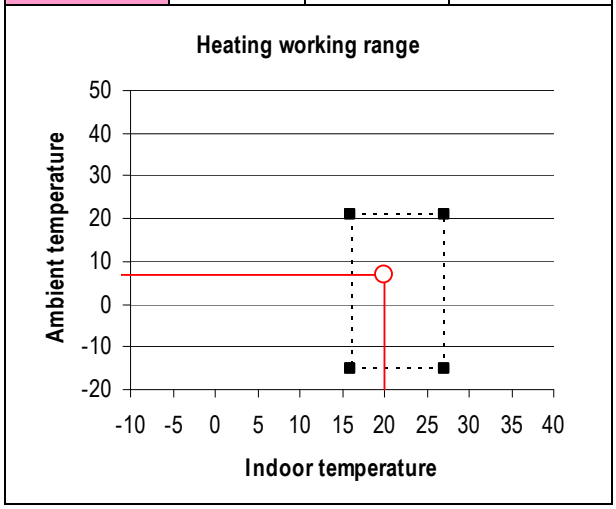

ONLY FOR RAM-80QH5

The temperature range is indicated in the following table.

Cooling

working range	min (°C)	max (°C)	rated (°C)
outdoor	10	43	35
indoor	16	32	27

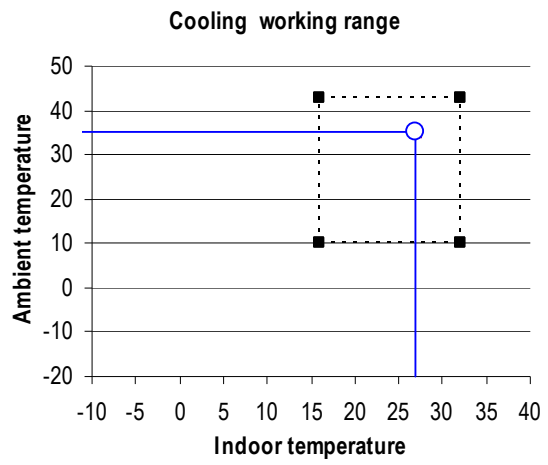

Heating

working range	min (°C)	max (°C)	rated (°C)
outdoor	-15	21	7
indoor	16	27	20

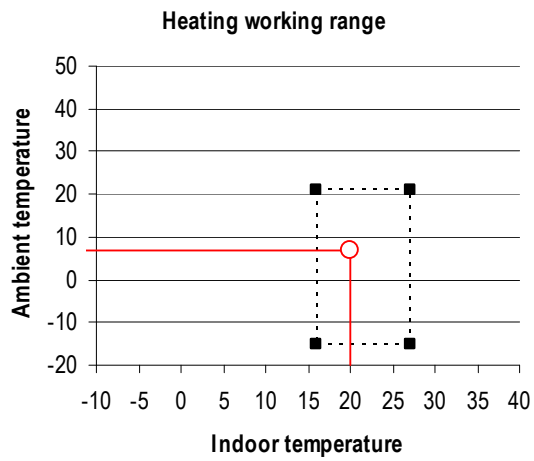

15-2-2. BIGFLOW

Applicable models

Cooling only	Heat pump
RAC-07G4	RAC-07GH4
RAC-09G4	RAC-09GH4
RAC-14G4	RAC-14GH4
RAC-18G4	RAC-18GH4
RAC-24G4	RAC-24GH4

The temperature range is indicated in the following table.

Cooling

working range	min (°C)	max (°C)	rated (°C)
outdoor	21	43	35
indoor	16	32	27

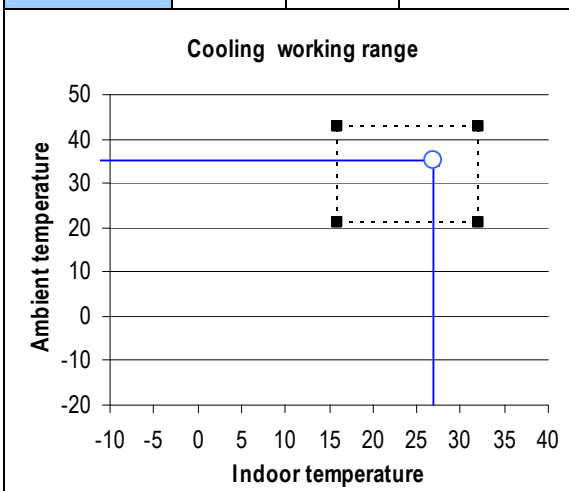

Heating

working range	min (°C)	max (°C)	rated (°C)
outdoor	-10	21	7
indoor	16	27	20

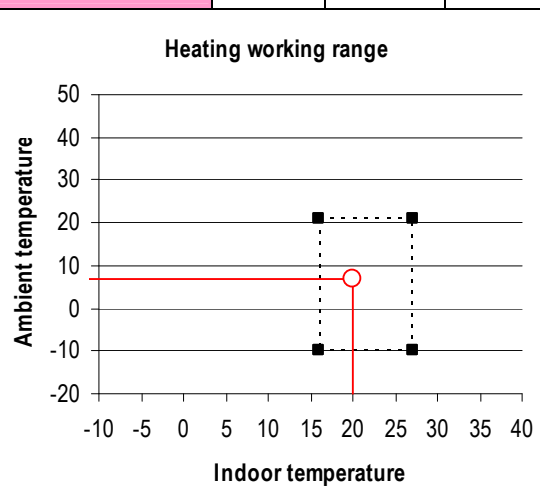

GSPN(Global Service Partner Network)

Area	Web Site
North America	http://service.samsungportal.com
Latin America	http://latin.samsungportal.com
CIS	http://cis.samsungportal.com
Europe	http://europe.samsungportal.com
China	http://china.samsungportal.com
Asia	http://asia.samsungportal.com
Mideast & Africa	http://mea.samsungportal.com

This Service Manual is a property of Samsung Electronics Co., Ltd.
Any unauthorized use of Manual can be punished under applicable International and/or domestic law.

© Samsung Electronics Co., Ltd. Nov. 2007.
Printed in China.

1. Precautions

1-1 Installing the air conditioner

- Users should not install the air conditioner by themselves.
  Ask the dealer or authorized company to install the air conditioner except the window-type air conditioner in U.S.A and Canada.
- If you don't install the air conditioner properly, it may cause a fire, a water leakage or an electric shock.
- You must install the air conditioner according to the national wiring regulations and safety regulations.
- Install the indoor unit higher than 2.5m from the floor to avoid the injury caused by the operation of the fan.
  (except the window-type air conditioner)
- The manufacturer is not responsible for any accidents or injury caused by an incorrect installation.
- When installing the built-in type air conditioner, keep all electric cables such as the power cable and the connection cord in pipes, ducts, or cable channels to protect them from the danger of impact or any other incidents.

1-2 Power supply and circuit breaker

- If the power cord of the air conditioner is damaged, it must be replaced by the manufacturer or a qualified person in order to avoid a hazard.
- The air conditioner must be plugged into an independent circuit if applicable or connect the power cable to the auxiliary circuit breaker.
  An all pole disconnection from the power supply must be incorporated in the fixed wiring with a contact opening of >3mm.
- Do not extend an electric cord to the air conditioner.
- The air conditioner must be plugged in after you complete the installation.

1-3 During operation

- Do not repair the air conditioner at your discretion.
  It is recommended to contact a service center directly.
- Never spill any kind of liquid on the air conditioner.
  If this happens, turn off the air conditioner and contact an authorized service center.
- Do not insert anything between the airflow blades to prevent damage of the inner fan and consequent injury.
  Keep children away from the air conditioner.
- Do not place any obstacles in front of the air conditioner.
- Do not spray any kind of liquid into the indoor unit. If this happens, turn off the air conditioner and contact a service center.
- Make sure that the air conditioner is well ventilated at all times:
  Do not place a cloth or other materials over it.
- Remove the batteries if you don't use the remote control for a long time. (If applicable)
- Use the remote control within 7 meters from the indoor unit. (If applicable)

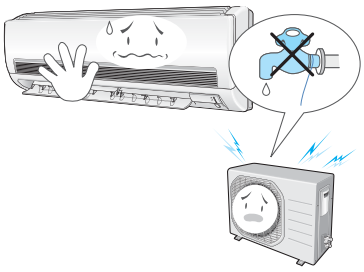

1-4 Disposing of the unit

- Before throwing out the air conditioner, remove the batteries from the remote control.
- When you dispose of the air conditioner, consult your dealer. If pipes are removed incorrectly, refrigerant may blow out and cause air pollution. When it contacts with your skin, it can cause skin injury.
- The package of the air conditioner should be recycled or disposed of properly for environmental reasons.

1-5 Others

- Never store or load the air conditioner upside down or sideways to prevent the damage to the compressor.
- Young children or infirm persons should be always supervised when they use the air conditioner.
- Max current is measured according to IEC standard for safety.
- Current is measured according to ISO standard for energy efficiency.